WARMroof

INSTALLATION GUIDE

prefix systems

August 2018
Version 2.1

CONTENTS

INTRODUCTION

This guide provides a general overview of the installation of the WARMroof.

Any areas or details not covered in this guide can be discussed with our technical support team on 01254 871800.

The WARMroof is delivered as a pre-fabricated kit. You will have clearly marked location plan showing the position of each pre-cut component, the numbers and letters on the plan correspond with those labelled on the components for ease of re-assembly.

IMPORTANT NOTE PLEASE READ BEFORE COMMENCING INSTALLATION

Structural Provision

The WARMroof weighs approximately 42kg/m2, this weight must be considered before installing the product to ensure the new or existing side walls are structurally capable of supporting the loadings of the WARMroof.

It is the responsibility of the installation company to ensure that proper structural provision has been made during the design and build of the side wall system. Prefix Systems have a full range of structural solutions for both new and retro fit installations. These are available from stock and our technical team can be contacted to discuss options further on 01254 871800

Items Required for Installation

Tools list – not exhaustive

- 16mm Socket
- Battery Drill / Driver
- Screwdriver bits PZ1,PZ2,PZ3,PH2
- Silicone gun
- Foam gun
- Tape measure
- Spirit level
- Stanley knife
- Hack saw
- Panel Saw
- 5.5mm Drill bits
- 4mm Drill bits
- Allen key
- Angle grinder
- Staple gun
- Tin Snips
- Rubber mallet

Consumables – not exhaustive

- Lead (code 4)
- Silicone (low mod)
- Foam – Supplied

IMPORTANT

* 12.5mm vapour resistant foil backed plasterboard must be used on the internal face of WARMroof - please ensure that manufacturer's installation procedures are followed (e.g. correctly taped/sealed joints).

MAIN ASSEMBLY

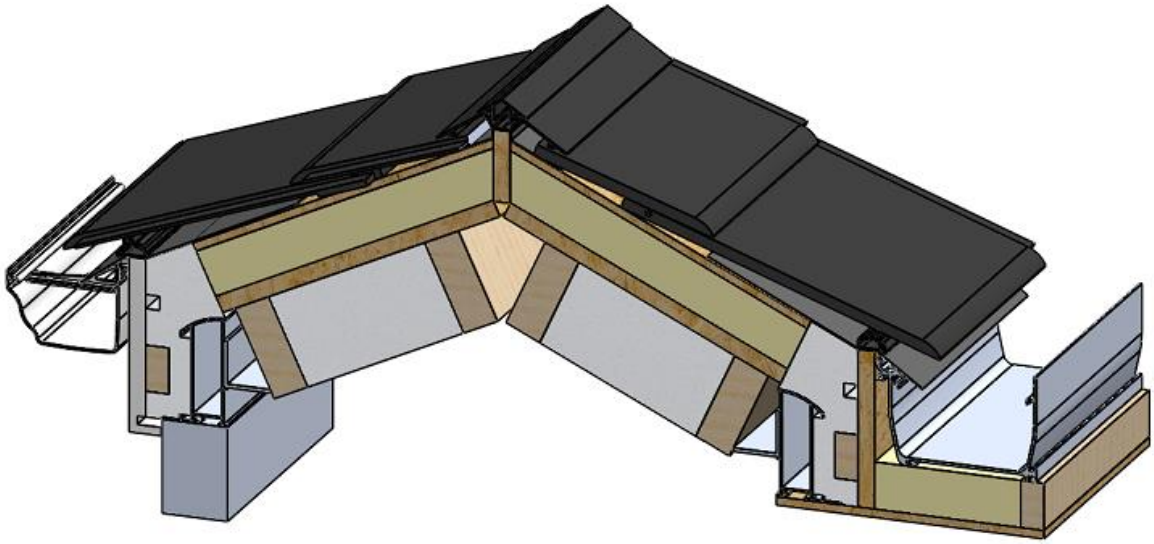

FIGURE 1 - GENERAL ASSEMBLY

IMAGES SHOWING DETAILS OF ROOF WITH FASCIA DETAIL ON ONE SIDE AND A BOX GUTTER ON THE OTHER.

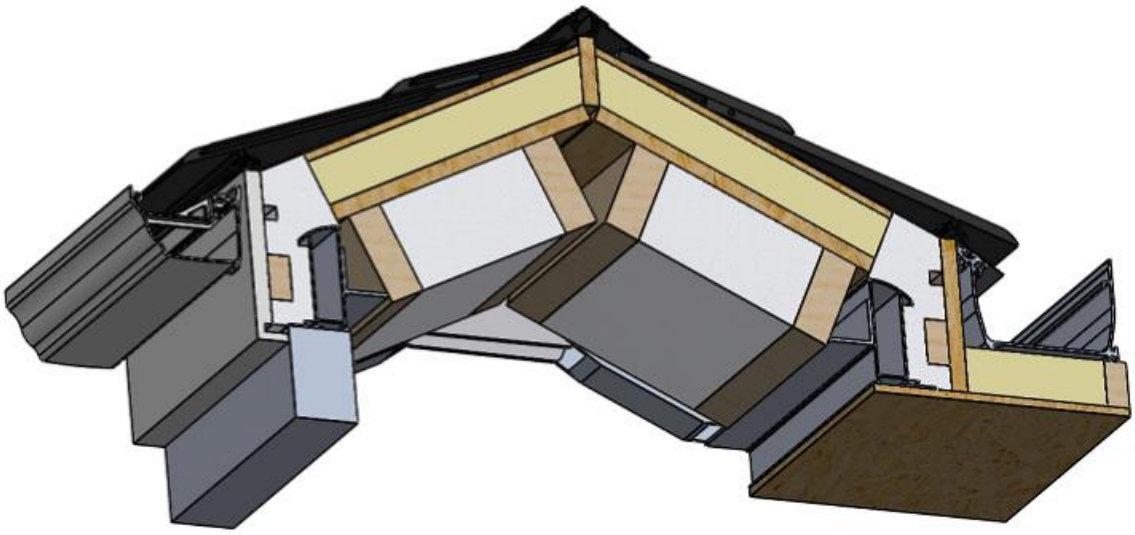

FIGURE 2 - GENERAL ASSEMBLY

MAIN ASSEMBLY CROSS-SECTION

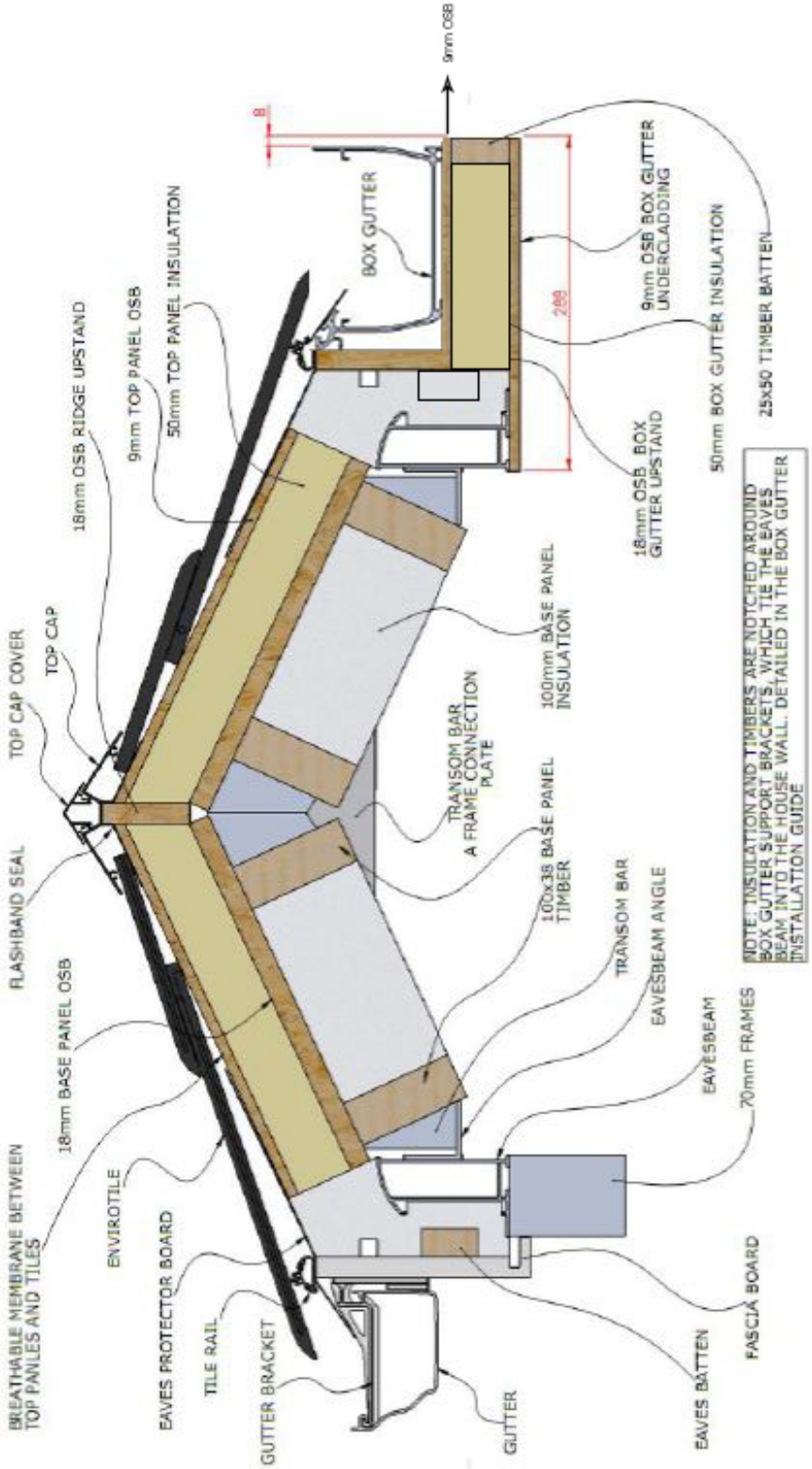

FIGURE 3 - MAIN ASSEMBLY CROSS-SECTION

EAVES BEAM / FRAMES

The eaves will have an insulated section secured in place by a timber batten to provide a positive fix

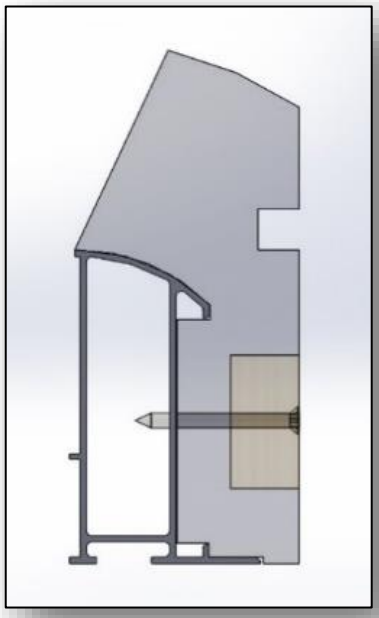

FIGURE 5 - STANDARD EAVES INSULATION

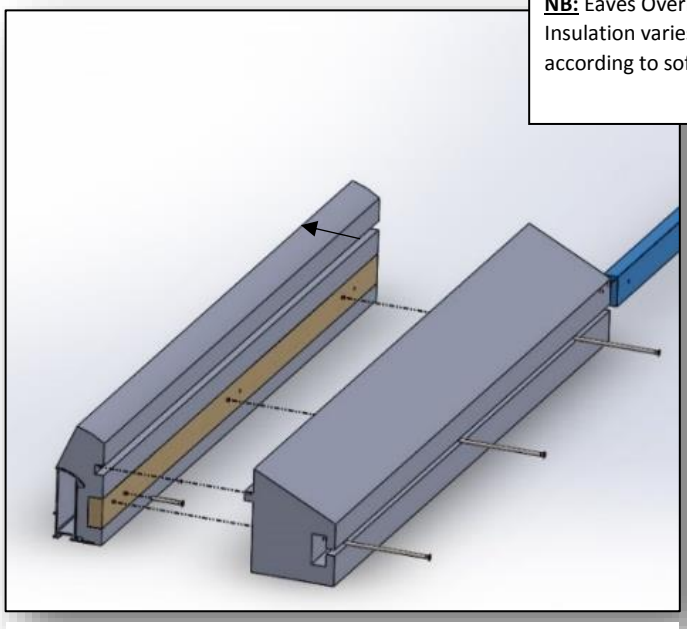

NB: Eaves Overhang Insulation varies in width according to soffit depth

FIGURE 4 - OPTIONAL SOFFIT OVERHANG INSULATION

For the fascia and soffit detail. (See fascia/soffit options section 10).

Fit eaves beam to supporting brickwork or head of the window frames as per standard conservatory installation. Ensuring it is sealed & fixed securely with the correct fixings at 450mm centres and within 200mm of each corner. It is important to ensure the frame work is square before starting to install the eaves beam and that adequate lateral structural provision is allowed. Do not fully fix eaves to frames until all bars are in place.

Note: If fixing directly onto brickwork suitable fixing straps should be used.

RAFTERS

The eaves beam has an angled carrier fixed to back edge with a 'shoe' for positioning of the 'A' frames. The shoe is numbered to correspond with the A frame position

FIGURE 6 - A FRAME BRACKET

Locate the rafter over the 'shoe' positions on eaves beam, fixing rafters into shoe using 2 off M6 x 16mm fixings provided.

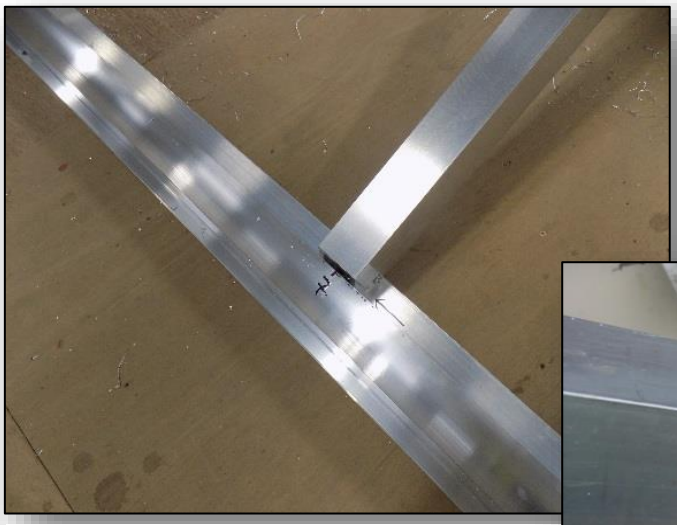

FIGURE 8 - A FRAME LOCATION

FIGURE 7 - A FRAME FIXING

FIGURE 9 - A FRAME FIXING

Where possible the 'A' frame rafters are delivered to site in one piece. Ensure first 'A' frame is fixed to house wall where applicable. This first A frame needs to be positioned and packed out or cut into the host wall. A 25mm tolerance has been included behind the first rafter to allow for any uneven host walls. Ensure all A Frames are level and frames are plumb before going on to install panels.

RADIUS END / HIP RAFTERS

The radius end is connected directly onto the last A-Frame where hips intersect. See component location plan to identify where these are positioned.

Check levels at this stage before fixing eaves beam down to the window frames / walls

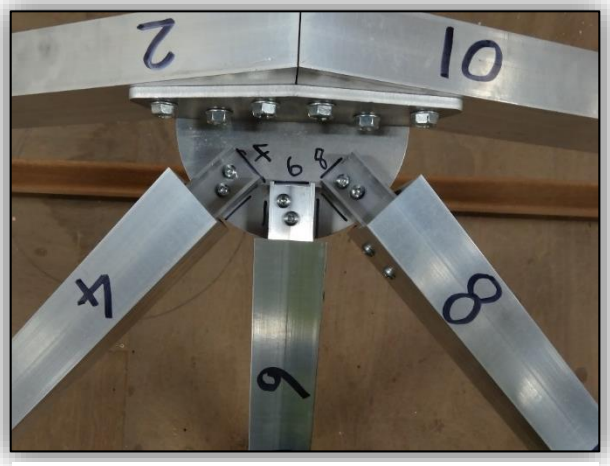

FIGURE 10 - RADIUS END

FIGURE 11 - RADIUS END

JACK / VALLEY RAFTER

FIGURE 12 - STANDARD JACK RAFTER

FIGURE 13 - ACUTE ANGLE JACK RAFTER

Secure the Jack Rafter / Valley bars into position using 3 off M6 x 50mm screws provided, these will be numbered at the eaves level.

The rafter positions will be clearly marked on the hips. Please note: Acute angle Jack Rafter requires 4 off M6 x 16mm screws provided.

TIE STRUT
Where possible the tie strut is pre-fitted to the A frame, if a tie strut has been supplied separately fit this now before installing panels.

Offer the fixing plate up to the rafter and level up before predrilling 9mm hole, 3 per plate using 10mm taptite fixings provided.

FIGURE 14 - TIE BAR

INNER INSULATED PANELS

Refer to the location plan and start to slot the preformed insulated panels between the rafters, starting in alphabetical order as per your plan.

The top face of the panels are designed to fit 'tight' together, therefore they may need manipulating into position. Starting at eaves level, work around perimeter and ensure the bottom end of the panels are all aligned.

Fix the bottom panels into the aluminium frame with 5.5 x 60mm (T30 TORX) self-drilling screws 4 per panel (one fixing in each corner), then work up the roof butting up the panels tight against each other.

NOTE: Heavy duty bars may need pre-drilling before fixing the screws (4mm drill bit). Drill/ Driver recommended - MAX. speed 1000>1600 RPM. Do NOT apply excessive pressure. Install perpendicular to work surface.

FIGURE 15 - INNER INSULATED PANELS

FIGURE 16 - FIXING INSULATED PANELS

TOP INSULATION LAYER

Please note it is advisable to fit eaves insulation sections before this stage - refer to page 14 & 15.

Now start to fit the top layer of insulation, refer to the location plan for position of panels – A gap should be visible at the hip and ridge positions for the timber spines to be fitted . As before start at the bottom edge and work around the perimeter before working up the roof.

Once top layer is in place and before fixing the panels down, the timber spines need to be positioned in the gaps between the top panels at the ridge and any hip positions as shown above. Important: For the correct hip soaker fitment they should protrude no more than 10mm above the surface of the top panel.

FIGURE 17 - TOP INSULATION LAYER

FIGURE 19 - FITTING HIP SPINES

FIGURE 18 - FITTING RIDGE SPINES

PANEL FIXING

Fix the top panel down to the inner layer with 90mm screws provided. Ensure you fix 9 screws per panel, each corner and mid-point, 75mm in from all edges. Finally fix through the top panels into the timber spines at ridge and hip positions.

FIGURE 21 - TOP PANEL FIXING

FIGURE 20 - SPINE FIXING

FASCIA & SOFFIT OPTIONS

Note: Suitable screws will be provided for bespoke soffit depths

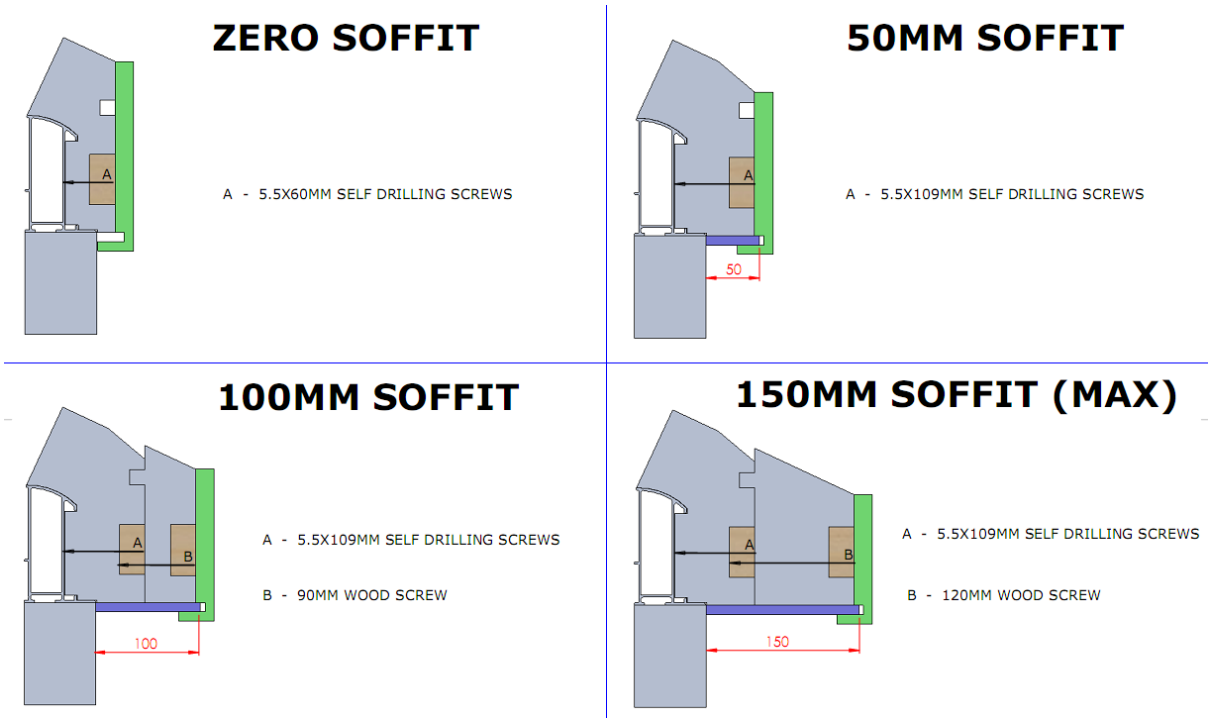

SOFFIT – IF SPECIFIED

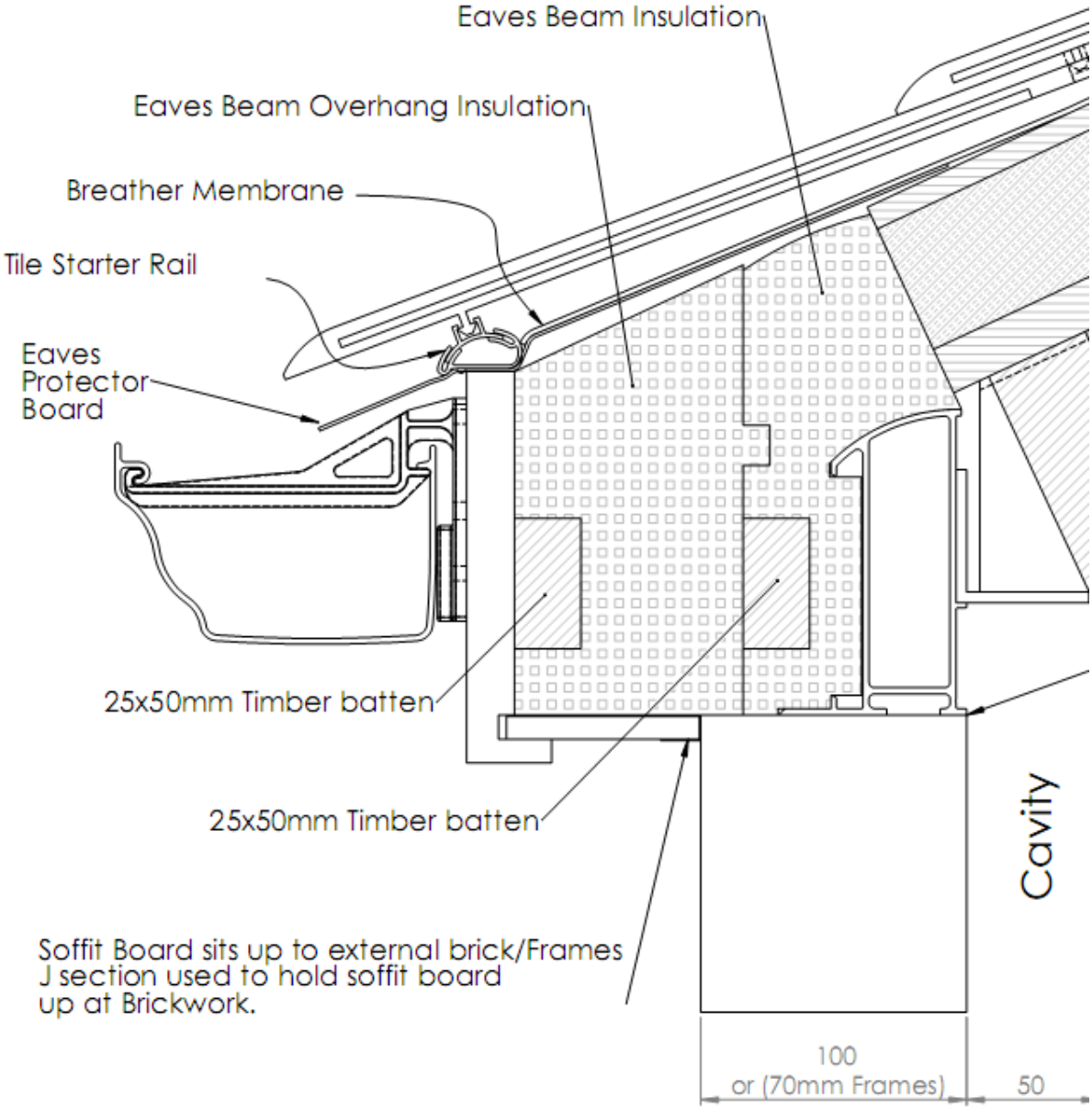

FIGURE 22 - EAVES CROSS SECTION

First fix the channel to accept the soffit board. Offer this channel up to the roof, mark and angle back to suit. Fix the channel into the window frame as shown.

Offer the soffit board up to the roof sitting the board into the channel already in place, mark the board and angle back to suit. Repeat around the perimeter of the roof. Using a cover strip for any angles or inline joints.

FASCIA

FIGURE 25 - LEVELING FASCIA

FIGURE 24 - FIXING FASCIA

FIGURE 23 - JOINTING FASCIA

Offer the fascia board up to roof and position to suit. If using a soffit board locate it into the rebate on the back of the fascia board and check for level at this point. Mark and notch out any fascia corners ready for fixing. Fix the fascia board using the set out lines shown checking for level when fixing.

Ensure two points of fixing at maximum 500mm centres along the length of the fascia and as close to the corners or gables ends as possible. Joint covers are supplied for any inline or corner joints

FIGURE 27 - FASCIA CORNERS

FIGURE 26 - FASCIA WITH SOFFIT

EAVES PROTECTOR

FIGURE 28 - EAVES PROTECTOR

FIGURE 29 - FIXING EAVES PROTECTOR

FIGURE 30 - MITRE EAVES PROTECTOR

Before installing the membrane ensure that the eaves protector is installed directly onto board and over the fascia detail, it should sit on the fascia to provide an adequate overhang into the gutter of no less than 50mm. Mitre and notch around any hip spines to provide a tight fit. Seal all joined sections of eaves protector with silicone. Minimum overlap of 200mm on straight joints.

MEMBRANE

Roll out the breathable membrane over the top panel, ensure the membrane lines through with the bottom edge of the panel, then working from the bottom up overlap the membrane by the sizes shown in table below. Use a staple fixing to secure in place.

Roof Pitch	Breather Membrane Overlap
Greater than 25°	100mm
20° – 25°	200mm
Less than 20°	300mm

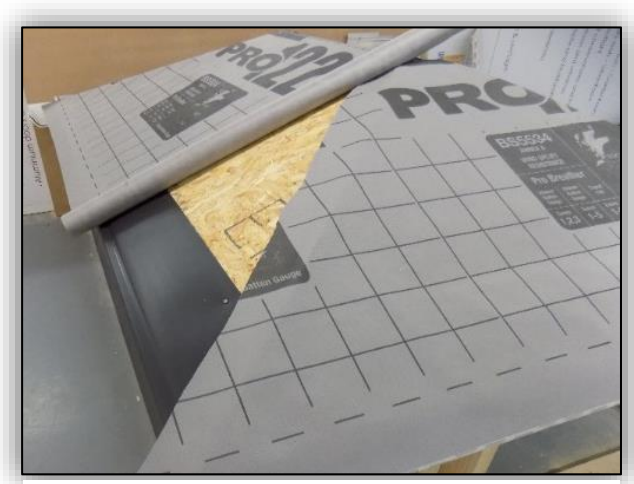

FIGURE 31 - MEMBRANE

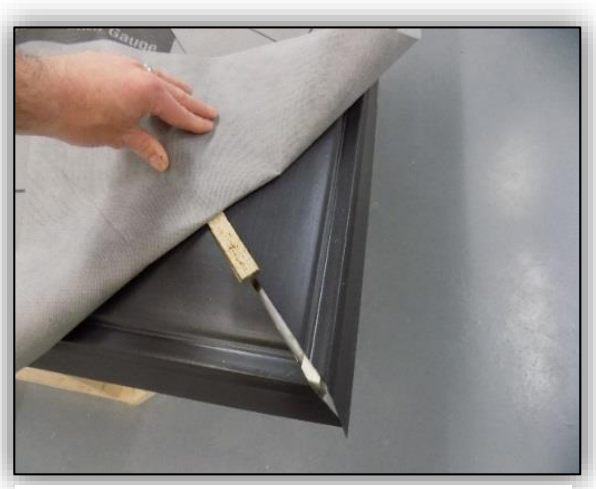

FIGURE 32 - MEMBRANE CORNERS

FIGURE 33 - FIXING MEMBRANE

WALL SOAKER

Ensure that the breathable membrane lips up onto the host wall in order to sit behind the soaker trim. The soaker is held in place by the tiles. Dress your lead or CONSERVAFLASH onto the soaker as shown. The soaker trim has a gasket that seals against the underside of your tile / slate. This gasket should point towards the edge of the tile as shown.

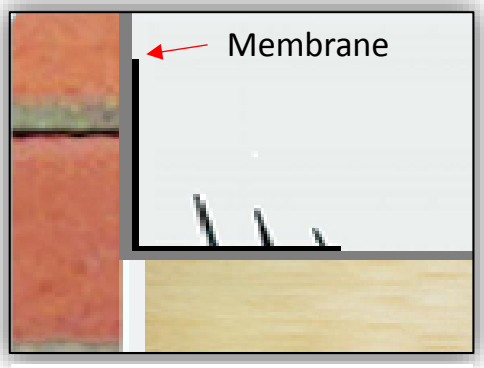

FIGURE 35 - WALL SOAKER

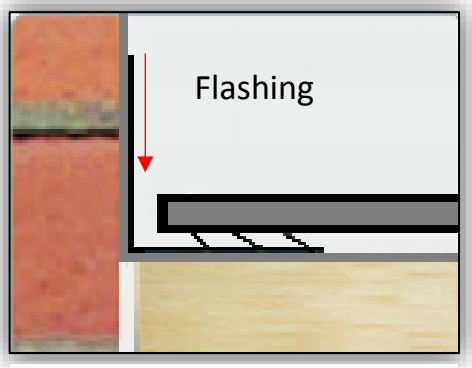

FIGURE 34 - WALL SOAKER

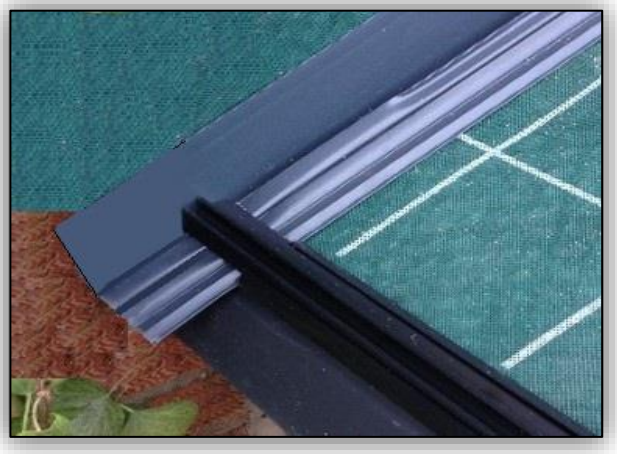

HIP SOAKER

Take two hip soaker wings and squeeze them together along the mid seam. They should clip into place.

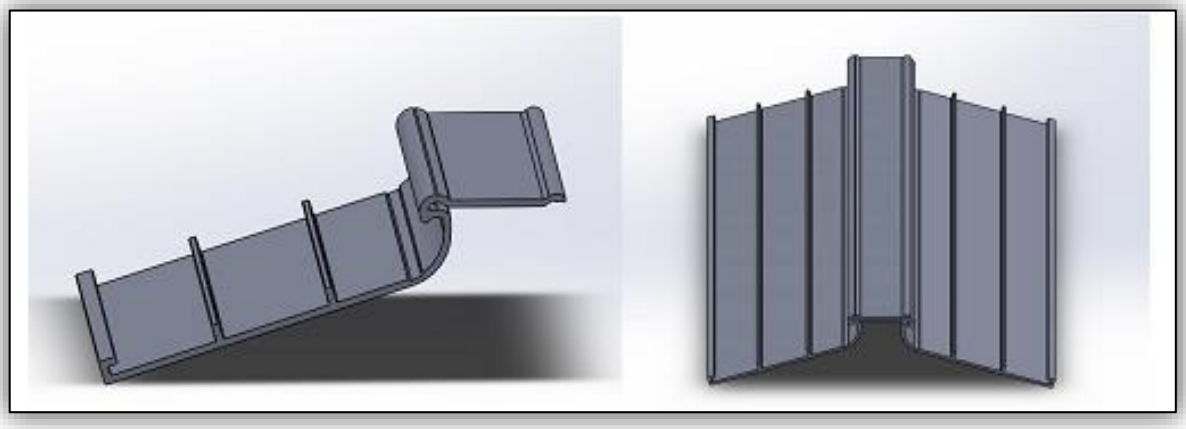

Hip soaker wing Assembled pair

Position the joined soaker over the covered hip spine. Mitre at the top where the soaker meets either a wall plate or where hips converge at a ridge end. Mark at the bottom end of the soaker parallel and overlapping by at least 25mm onto the eaves protector then cut to suit.

ENVIROTILE INSTALLATION.

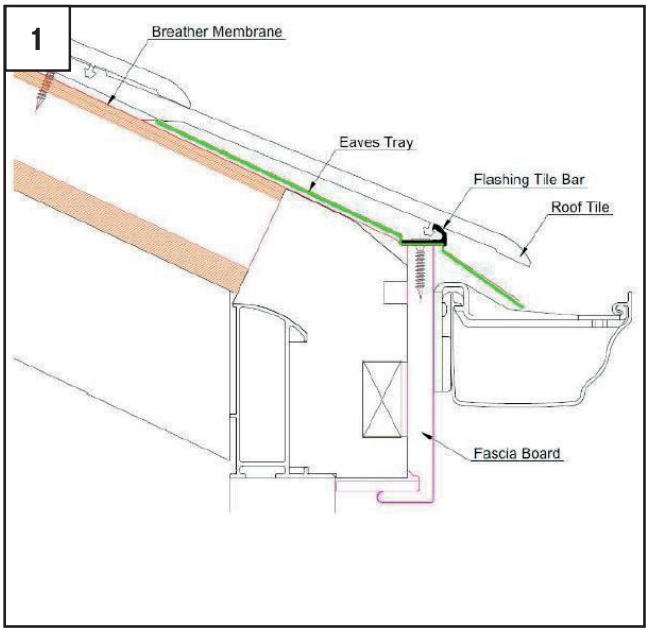

Line the tile bar with the lip of the eaves protector, up to edge of the wall soaker. Offer a tile into position to ensure sufficient overhang into gutter. Ensure the rail runs parallel to eaves. Fix starter rails down using 40mm stainless steel screws provided at 300mm centres and 100mm max from each end.

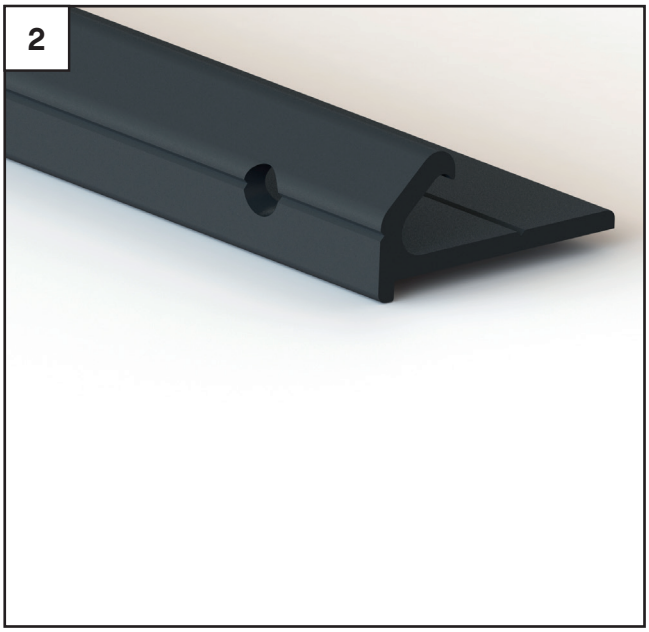

Once secured, mark and drill Ø5mm holes in front face of tile bar 100mm in from each end and 1m centres. Alternatively tile bar can be installed on 6mm packers to allow ventilation and drainage.

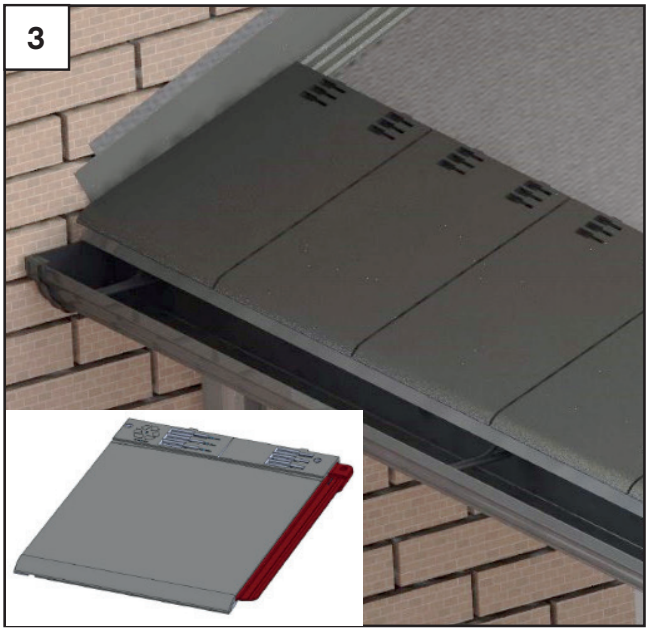

Position 1st tile into the starter rail, ensuring the locking tabs hook under the tile rail and fix using 40mm stainless steel screws. Continue along eaves leaving a 5mm gap between tiles Prior installation on the RH roof face the last tile against the wall need the male joint tab removing in order to locate tile against wall. Note: An expansion gap is required of 5mm between tiles, this is marked on each tile.

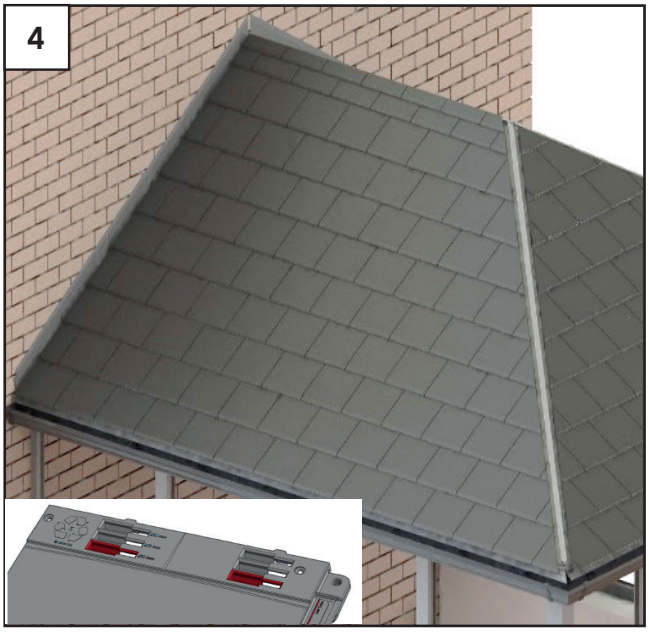

Tile remainder of roof. Fix tiles using the 40mm stainless steel screws provided, one screw per tile using the preformed fixing point, it is important not to over tighten the screws into the tile.

Note: As a general rule use the bottom slot (250mm overlap) when laying the tiles, as this gives the most coverage to suit all pitches

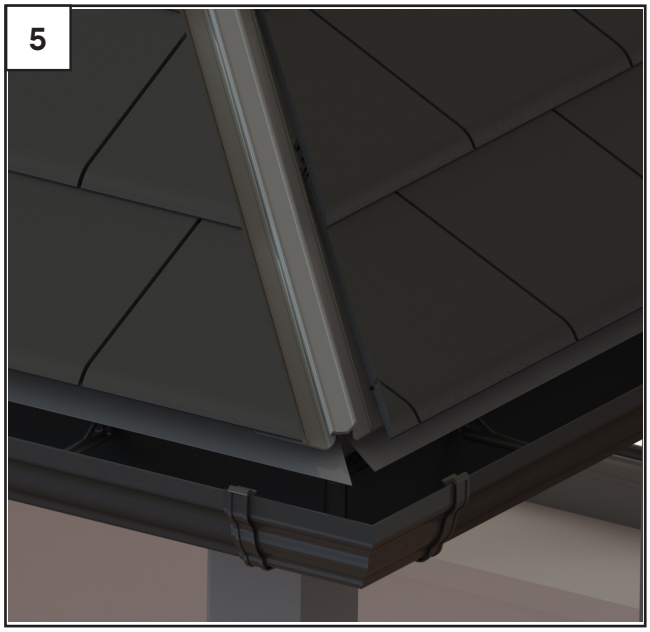

Using a panel saw cut down the last tile into the ridge / hip to suit. Tiles will also need to be cut or angled to suit on hip details, gable ends and against house walls.

IMPORTANT – Ensure that the hip soakers run into the gutter and are positioned beneath the last tile at the hip point (not ridge), this acts as a secondary drainage channel, should any water enter this channel it will be diverted away from the hip junctions and into the gutter system.

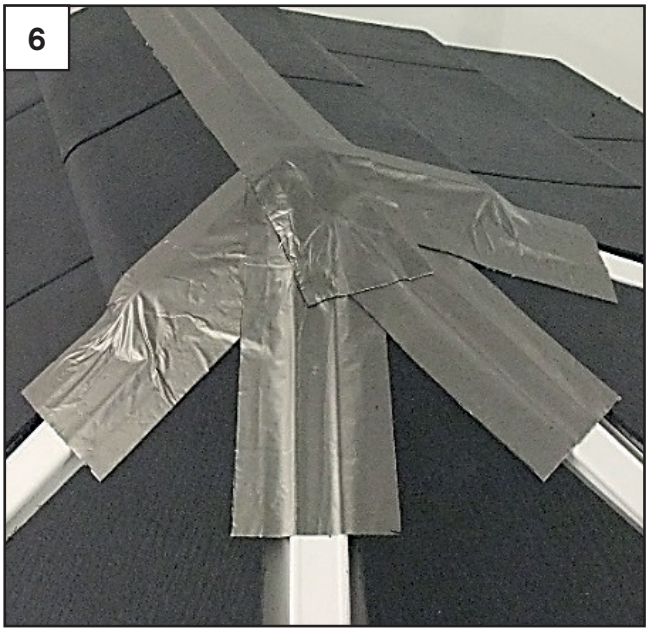

Once tiling is complete seal the full length of the ridge and 250mm down each hip using the roll of flash band provided, ensure fully weatherproof.

HIP & RIDGE CAP INSTALLATION.

Position Ridge cap on roof. Drill and fix base of ridge down to ridge spine using 40mm stainless screws provided then clip in the cover rail. When using an aluminium radius end cover, cut back the clip in profile by approximately 120mm.

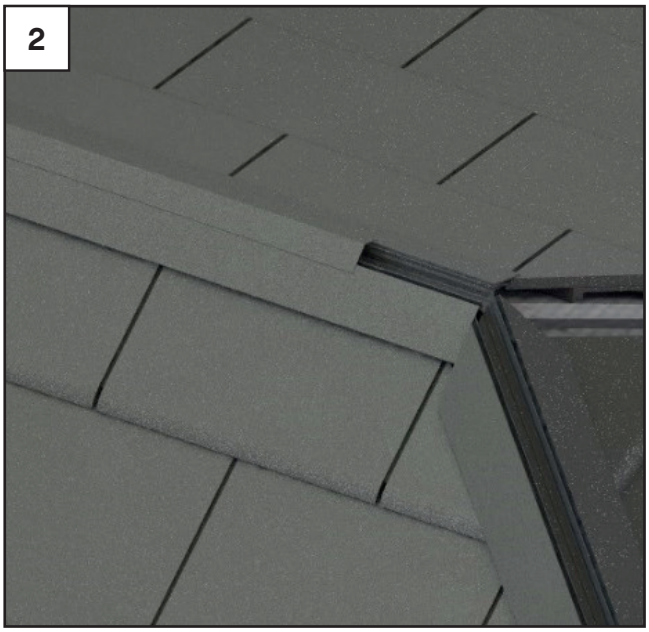

Place hip caps in position on roof so top of ridge lines through with the top of the hip caps, mark out and cut so they mitre in at the radius end. Drill and fix base of hips down to hip spines using 40mm stainless steel screws provided and clip in the top cap cover profile. Seal the mitred joints at the ridge.

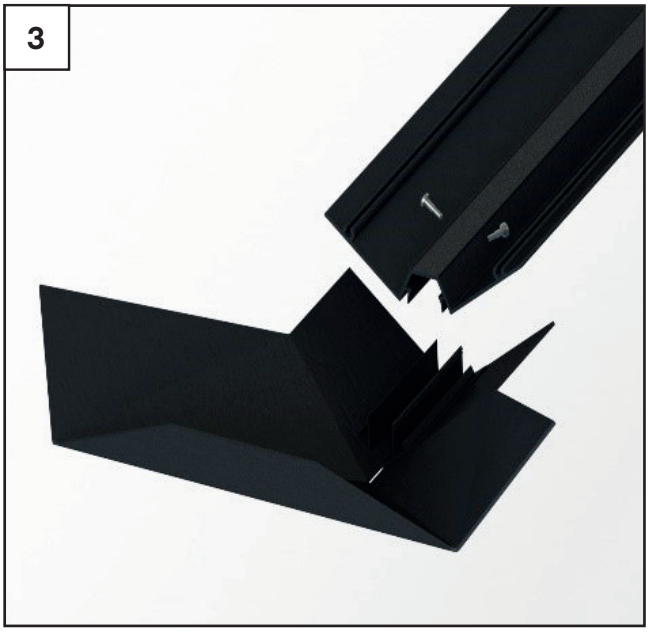

Prior to screwing down Ridge Cap to the roof, run silicone along underside of radius end cover 10mm in from edge, clip radius end cover into position on the Ridge Base Capping and turn over.

Using 2 Ø3.8 x 13mm self-drilling screws, fix through base capping into the legs on the radius end cover to secure cover in place.

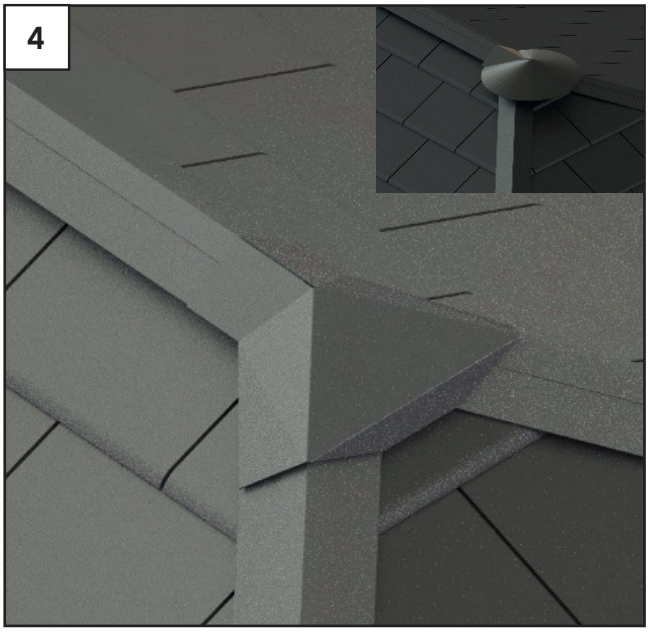

DRY VERGE

FIGURE 41 - DRY VERGE

Right Hand Dry Verge Unit

Left Hand Dry Verge Unit

Fixing Clip

Angled Ridge End Cap

After Fixing the Fascia Board to the Gable End or Lean-to End Bars, fix 25 x 50mm batten along the full length aligned to the upper edge and mitre as necessary. 70mm Wood screws are provided.

Fold the membrane down over the batten and staple into place continuing to tile the roof as normal making sure the tiles finish flush with the front edge of the batten.

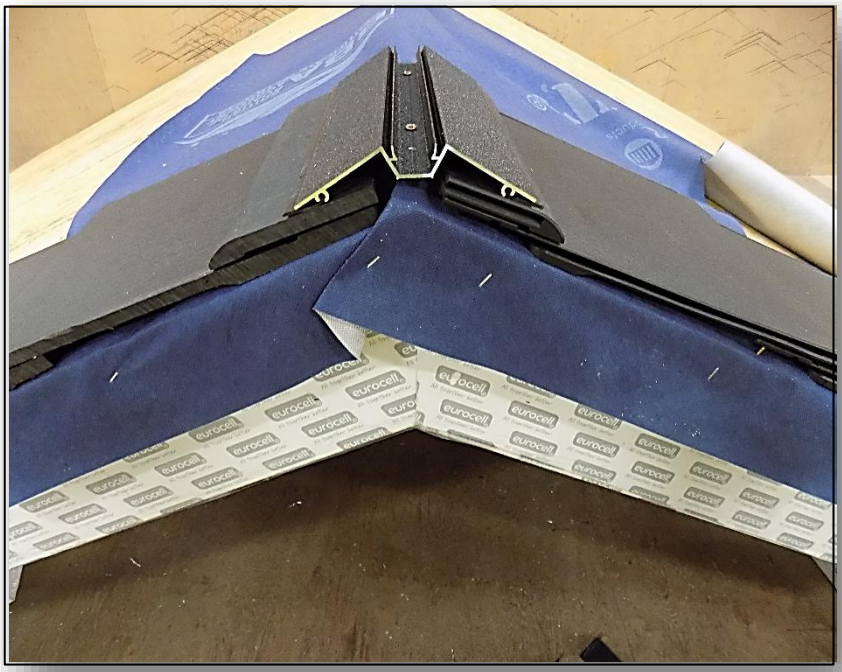

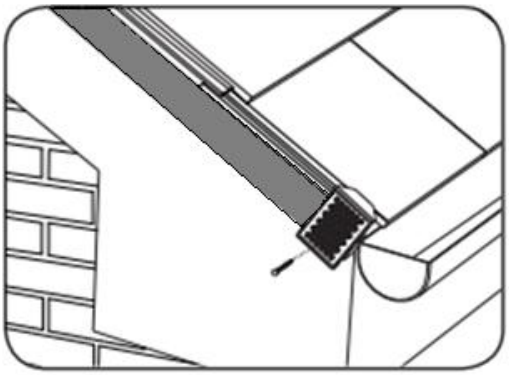

Using 40mm stainless steel screws, securely fix a Fixing Clip to the end of the fixing batten at the eaves. It is important to ensure that the flange of the fixing clip that is labelled “top” faces upwards. Screw through an appropriate hole so that the nail penetrates the centre of the batten.

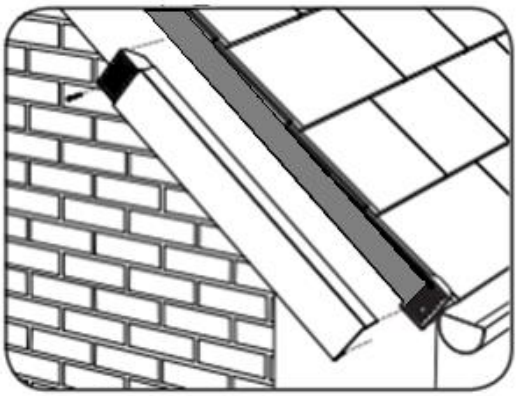

Hook the Linear Verge Unit over the top of the Fixing Clip and press firmly until it engages. While pressing the verge unit down against the tiles, Screw the tail end of the linear verge unit using 40mm stainless steel screws, through an appropriate hole so that the screw penetrates the centre of the batten strip.

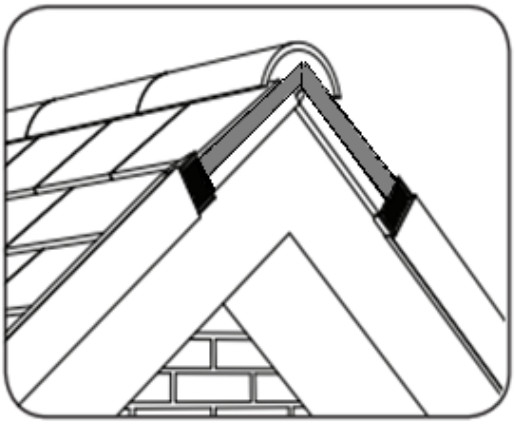

Continue to fit full lengths of the linear units up the run of the verge until all tiles have been covered or no full lengths can be fitted as shown. Once one hand of the verge is completed repeat steps 3 & 4 on the opposing verge, this time using the other hand of Linear Verge Units.

IMPORTANT - ENSURE THE 3MM EXPANSION GAP IS LEFT BETWEEN CONNECTING DRY VERGES. SEE LINE MARK ON DRY VERGE.

For the final piece(s) of verge, fit another fixing clip approx. 100mm down from the apex (on both sides for a gable).

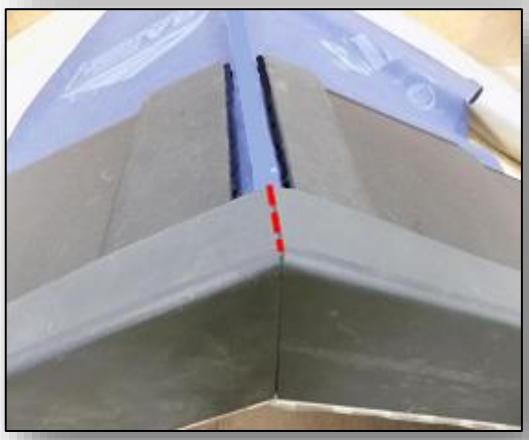

Then mitre the final verge sections together and seal as shown above.

Install The Ridge Capping in the usual way (as per installation guide) making sure it runs to the edge of the new verge.

Trim the Ridge Capping along the edge shown to allow a closer fit with ridge top cap.

Attach the foam tape and silicone in front to prevent driving rain from tracking under the capping. Reattach and fix with the screws provided in the kit.

Lean-To roof designs will follow the same procedure using only the appropriate hand of components. Where a Lean-to meets the wall – the verge should be mitred finished and flashed over with the appropriate flashing.

Note: Careful attention should be taken when specifying 'Right' & 'Left'

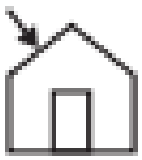

Right Hand Verge

Left Hand Verge

VELUX ROOF LIGHT

The mainframe of the Velux Roof light is Pre-fitted into the panel for ease of installation. Tile up to the bottom of the Velux Roof light at that point fit the flashing kit as per the drawing on next page, once flashing kit is installed continue to tile the rest of the roof as normal. Cut tile to suit around flashing

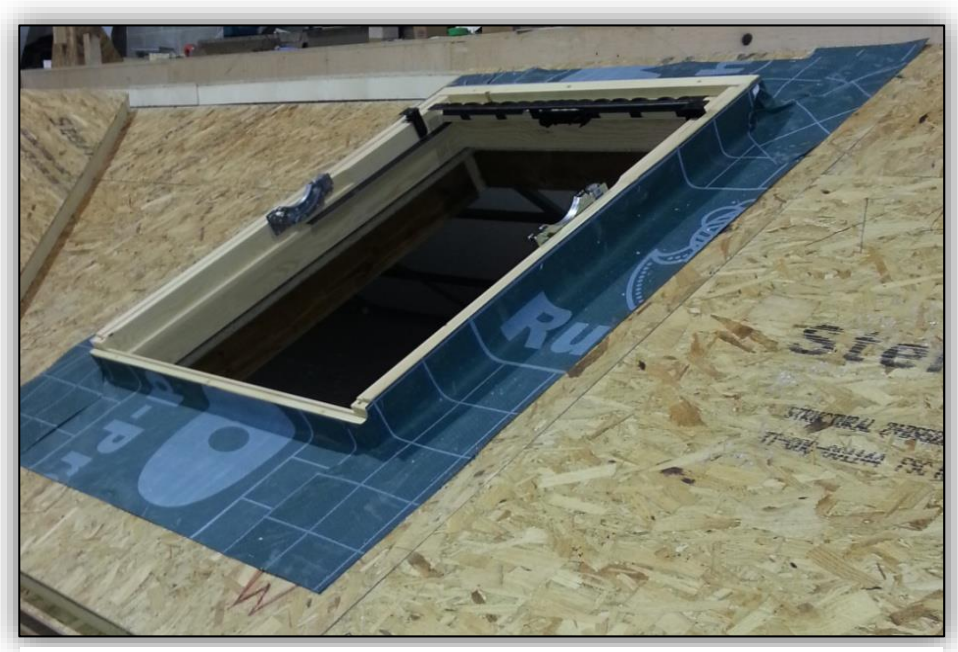

FIGURE 42 - VELUX ROOF LIGHT

FIGURE 43 - VELUX ROOF LIGHT

Note: Soakers should be fitted continuously before roofing material is applied. Ends of soakers to be folded upwards as shown below in step 3.

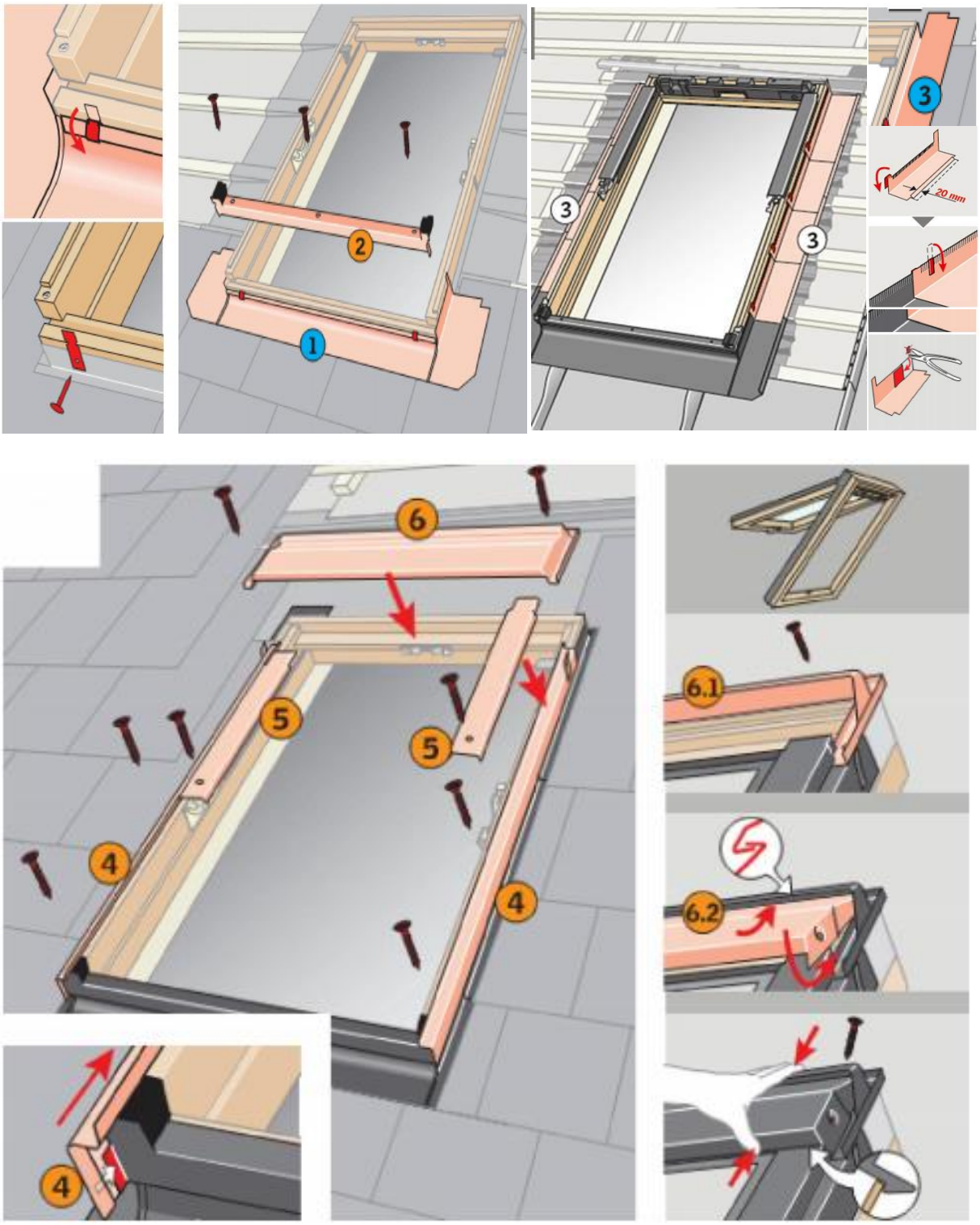

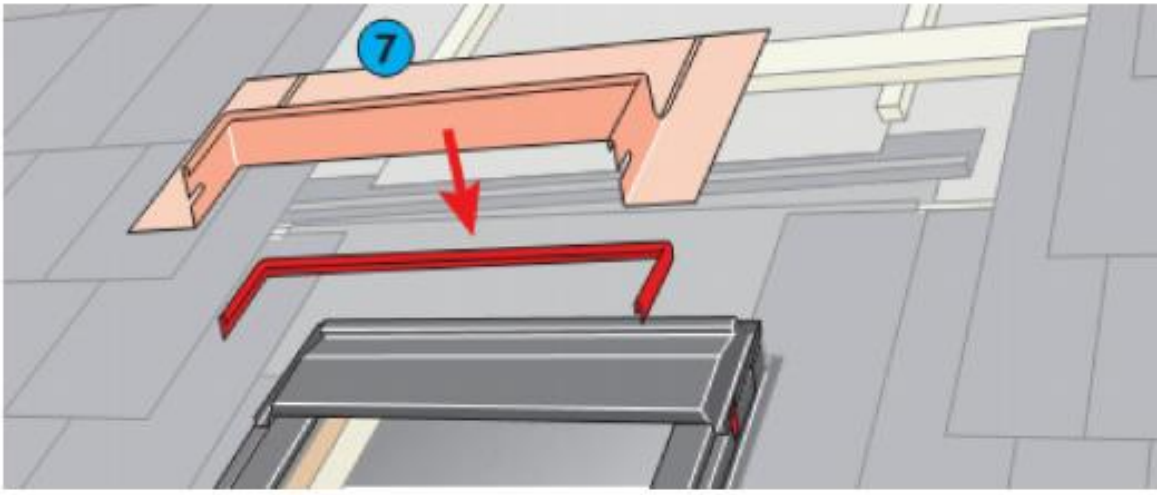
7

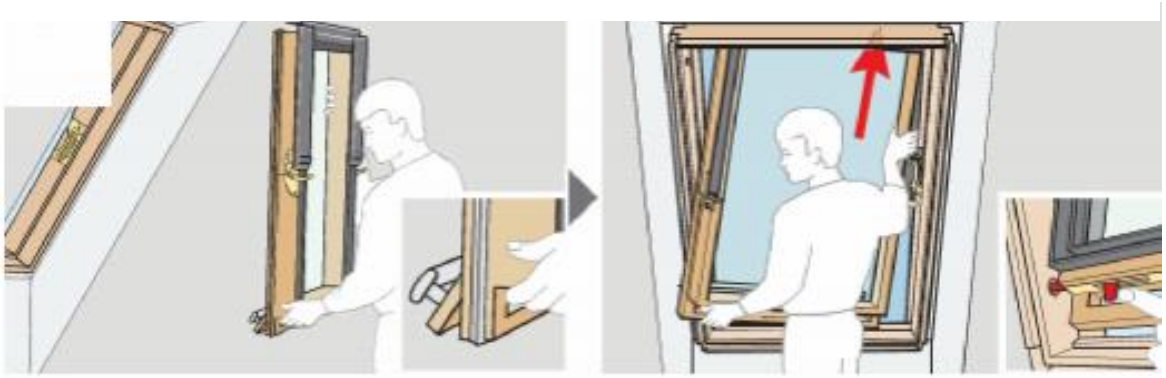

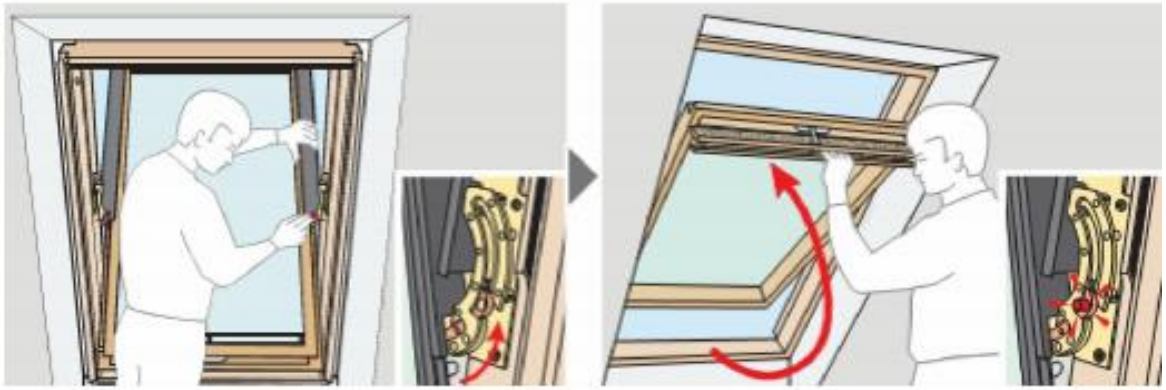

BOX GUTTERS

Note: Box gutters should not span any further than 2000mm without support unless an alternative solution has been structurally approved.

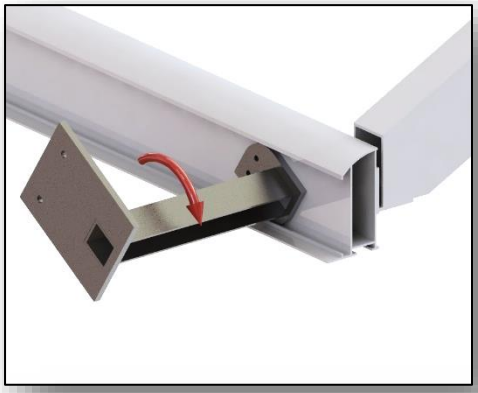

Set the eaves beam 288mm away from the host wall (Internal Frame). Quarter turn the support brackets into the eaves beam positioning them in line with A-Frames where possible. Mark the position on host wall and eaves beam.

NB: Max Bracket Centre's is 1200mm. Follow position references on roof confirmation

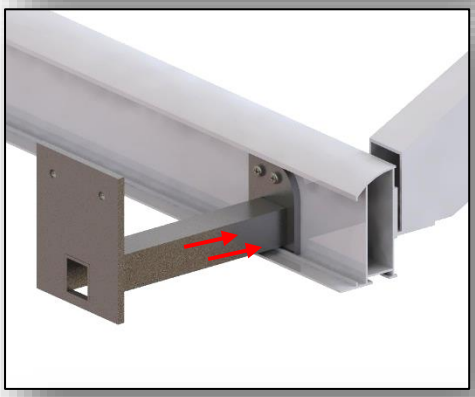

Move the eaves beam to a suitable working position. Drill and fasten each bracket to the eaves beam using M6 x 16mm Taptite screws provided.

Use a 5.5mm drill bit

M6 x 16mm

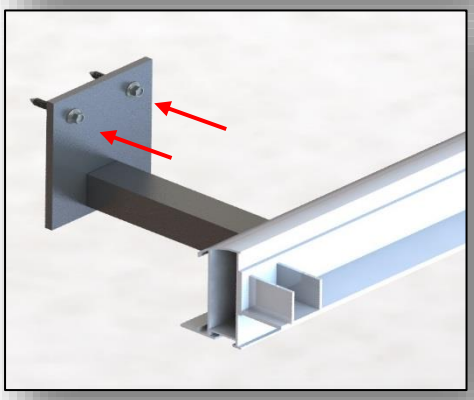

Set the eaves beam back into position and fasten to Host Wall using *appropriate fixings.

**Substrate fixings are not provided, the installer is responsible for selecting the appropriate fixing for the host building material.*
Note: It is important the eaves beam is positioned square with rest of roof. Pack behind brackets where host wall runs out of square.

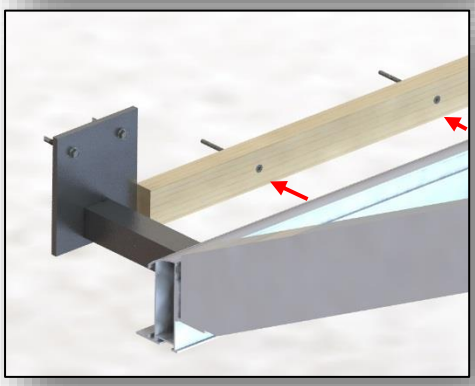

Cut and fix 50x25mm timber batten to the host wall in between brackets making sure the underside of the timber is in line with underside of eaves beam. *(Top of frame height)*

Fix 9mm OSB to underside of Eaves beam and batten using 4.8x40mm countersunk self-drilling screws provided.

Batten – Mark 12.5mm in from edge of OSB

Eaves – Mark 20mm in from Edge of OSB

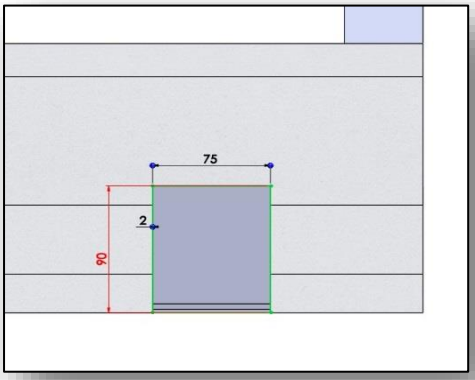

Mark and cut notches in Eaves Insulation and cut out to fit over support brackets where applicable.

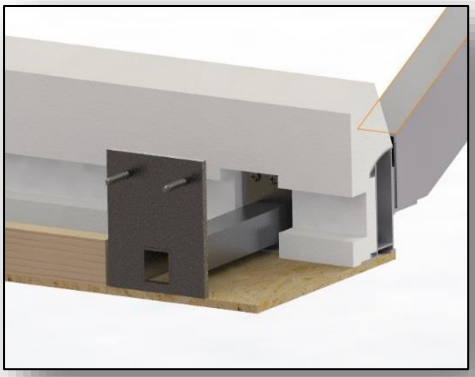

Push Eaves Insulation over Eaves beam and support brackets.

NB: ALWAYS use 86mm wide EPS Insulation at box gutter, even when wider 116mm insulation is used around the rest of the roof to create a soffit overhang.

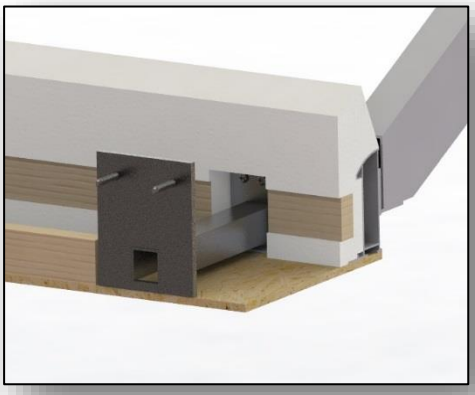

Cut 25 x 50mm batten to push fit into eaves insulation between the brackets. Batten does not require fixing.

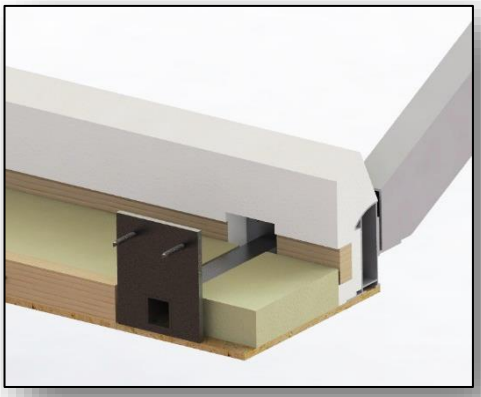

Measure and cut 50mm PIR insulation to length and push fit in between support brackets on to 9mm OSB.

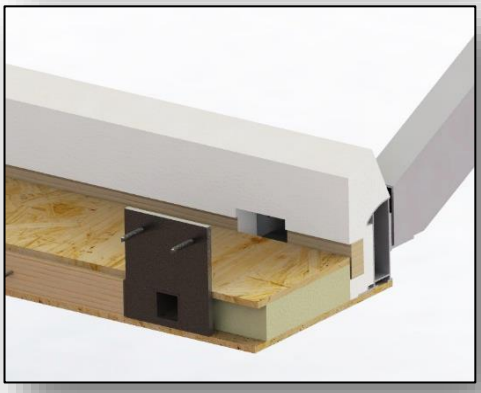

Fit 9mm OSB board over the top of the insulation and support brackets. Secure in position using 4.8x40mm countersunk self-drilling screws provided

It is recommended filling any voids using expanding foam

Fit 18mm OSB board over the top of the 9mm OSB vertically against the Eaves Insulation. Fix diagonally down into the Eaves Batten to hold in position.

Line OSB with Strip of Membrane, Lapping up approx. 200mm over the Top Panel. Overall Width of Membrane Approx. 600mm

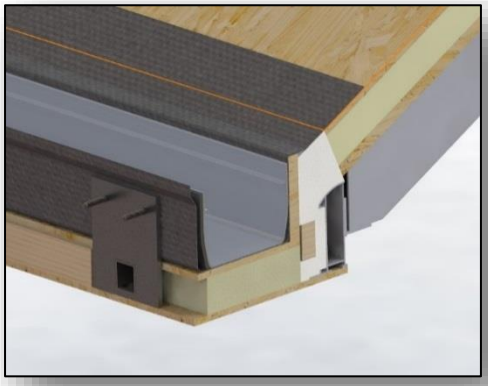

Position box gutter with foam insulated edge against the host wall.
Any Joints in box gutter should be sealed properly and adapters sealed in position. Drill and fasten box gutter back to host wall using sufficient fixings (not supplied) Back fill any gaps between host wall and box gutter with expanding foam. Lead flash down into box gutter, ensuring fully sealed and water tight.

At this point it may be worth lining up gutter and gutter brackets around rest of roof before installing eaves protector and tiles for ease of installation.

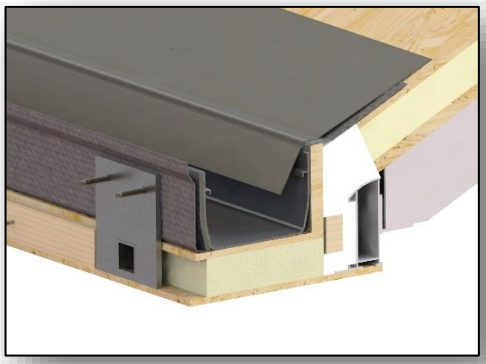

Fit Eaves Protector Board over top panels and box gutter membrane with drip edge dropping into box gutter.

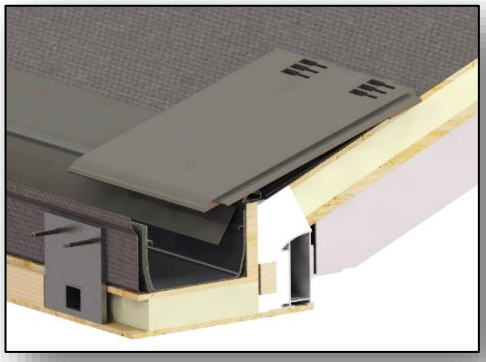

When ready install membrane to all roof faces as previously described. Fasten tile rails in position over top of 18mm OSB upstand. Continue as per rest of roof and Tile.

If using Tapco Tiles remember to double layer the first row and allow sufficient overhang into the box gutter.

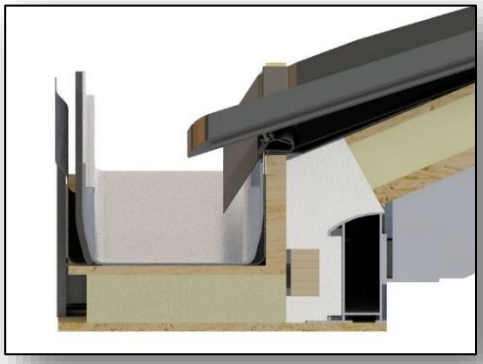

It is recommended to back fill any gaps with expanding foam gun prior to lead flashing.

BOX GUTTER JOINTING

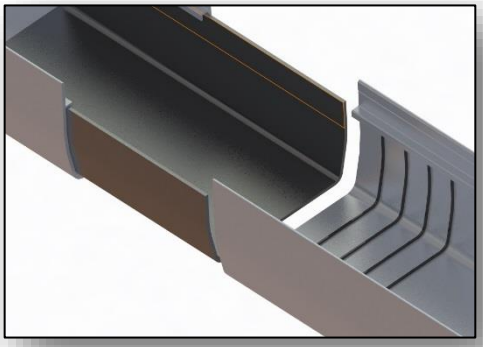

Thoroughly clean box gutter mating parts to remove any dirt or grease. Apply generous beads of low modulus neutral silicone to the clean area where the internal sleeve locates ensuring full face of sleeve will be sealed.

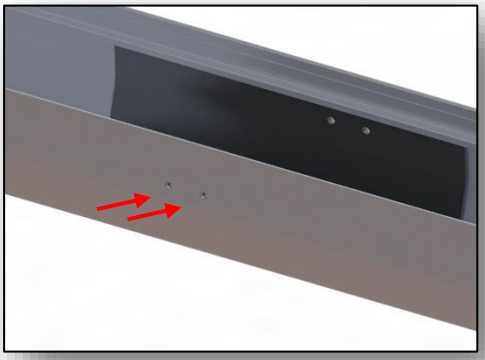

Push sleeve into other half of box gutter until both faces are flush together. Drill 6.5mm holes through the box gutter and sleeve both sides within 50mm of the edge of the joint.

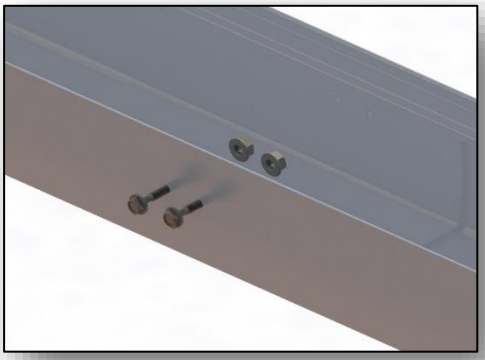

Fix using the nuts, bolts and washers provided in the joining kit. Seal over all the exposed bolt heads on both inside and outside of the box gutter.

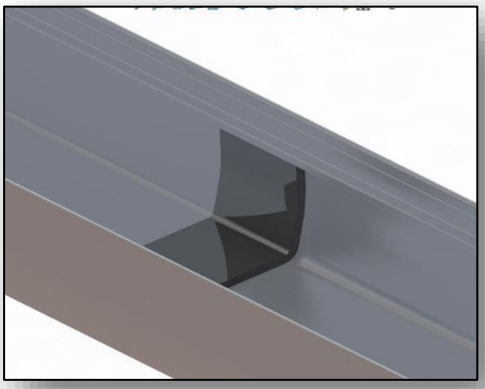

Check surface is dry, clean and grease free. De –grease if necessary.

Heat both sealing tape and the box gutter with a heat gun and position the tape firmly across the joint of the sleeve and box gutter ensuring no air gaps.

BOX GUTTERS AGAINST FASCIA

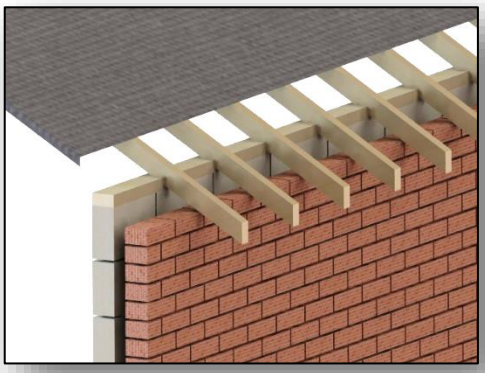

Remove existing house fascia board, tiles and membrane to reveal sufficient house rafters.

Line rafter straps up with top of house rafter with vertical plate flush against end of rafter. Mark and drill holes 11mm to suit M10 fixings.

NB: Rafter straps in some cases may need cutting down as each site survey varies rafter height, soffit and cavity depths. DO NOT cut brackets down to less than 300mm in length.

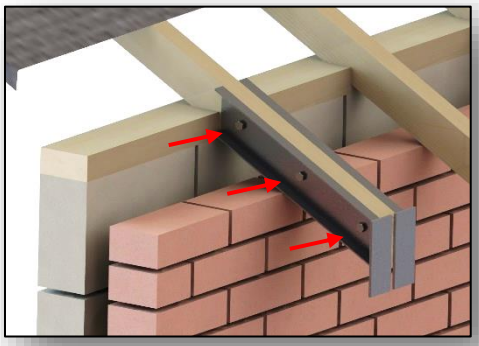

Fix through straps using M10 hex head nut and bolts provided. Ensure 3 fixings are fitted per bracket.

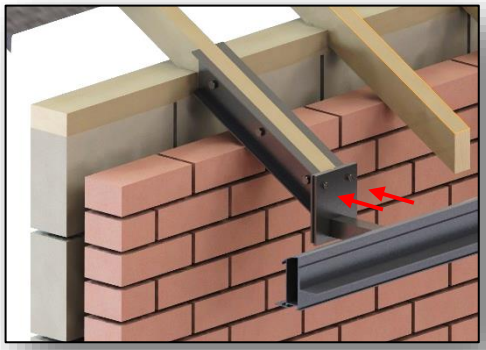

Position Eaves Support brackets on to eaves beam, line up with rafter straps and mark positions.
Drill 5.5mm holes in Eaves, fasten using 2x M6x16mm Taptite Screws.
Drill 9.5mm holes in House Rafter Strap Plate, fasten using 2 x M10 x30mm Taptite Screws.
On some site scenarios. Plates may require re-drilling and/or cutting down on site to suit.

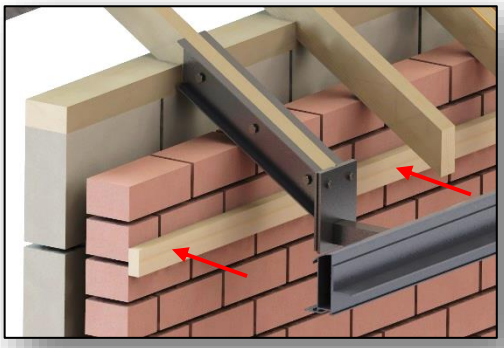

Measure and mark line on house wall in line with top of frame height (underside of eaves beam) and fasten timber batten to house wall, with bottom edge in line with top of frames.

Measure distance from internal eaves beam to host wall and cut 9mm OSB (supplied in 600x1200mm sections) to size and fasten to underside of eaves beam and timber batten. Clad out eaves beam etc. with insulation following Box Gutter installation guide on pages 34-37.

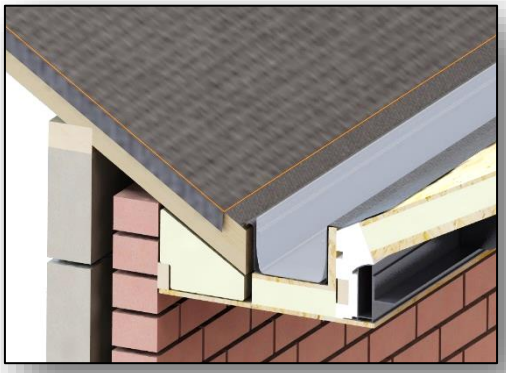

Fill any voids and areas between house rafters with expanding foam, or Rockwool Insulation (not supplied).

Secure and seal box gutter in position before re dressing house. Continue Warm Roof installation as per rest of install guide.

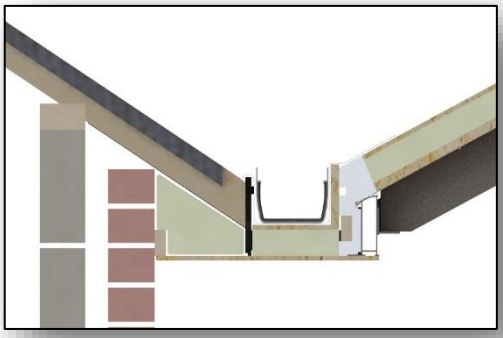

Where site surveys alter from this typical example please contact the Prefix Technical Department for guidance on an alternative solution prior to Installation.

VALLEYS

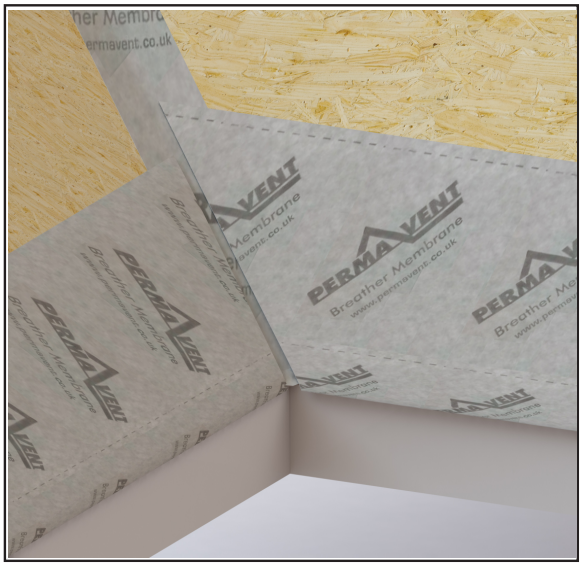

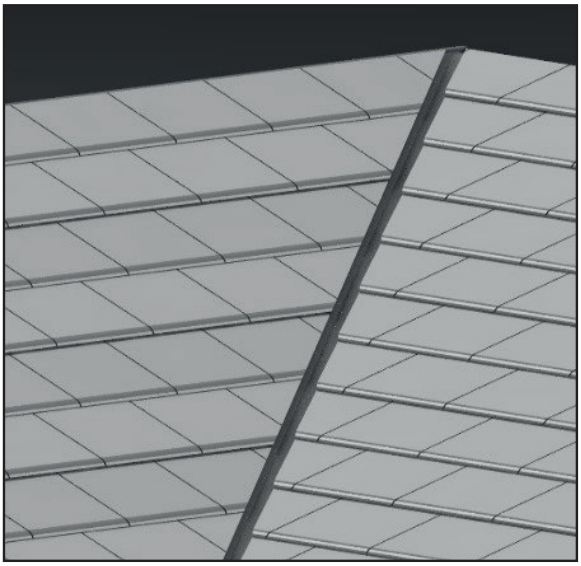

Run membrane across the roof. Make sure an extra strip runs down the full length of the valley for each side membrane to run on to. The strip must be the full width of the membrane roll. Sit the GRP Valley tray in position. Mark and cut top and bottom to shape ensuring enough overhang into the gutter. If fixing down, pin along outside edges, away from where any running water will reach using 38mm stainless screws.

When running tiles in to the valley, ensure no fixings go through GRP. Run tiles over the shoulder and sand strips minimum of 25mm (distance between tiles meeting to the discretion of the installer). Note: when tiling into a valley with Envirotile optional expanding foam tape can be used to cover the gap below tiles.

FLASHING TRAY DETAIL.

Using drawing pack (provided) measure and mark position of wall plate on host wall. Fix in position 150mm from each end and at approx. 500mm centers using suitable fixings.

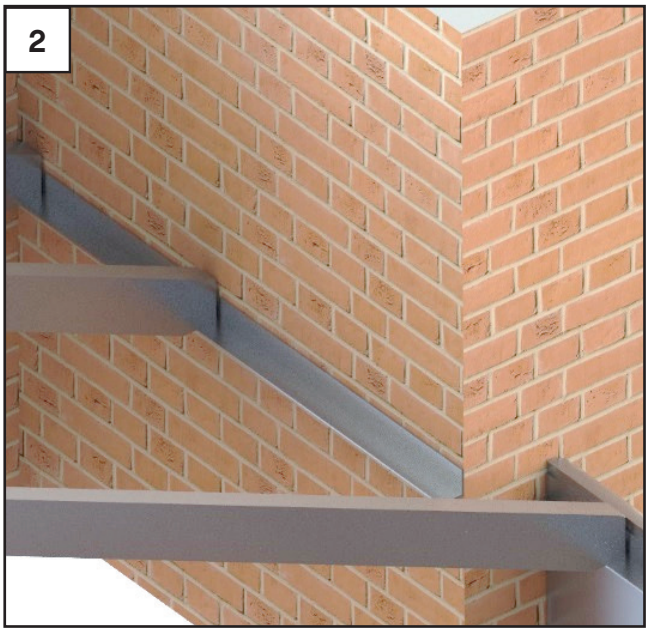

From information provided, identify and locate the rafters. Using M6x16mm Taptite screws, fix the rafters as per standard detail over the uchannel brackets on the wall plate.

Identify and fit base panels into position. Ensure the top edge of the base panel sits against the host wall and the internal timber against the edge of the wall plate.

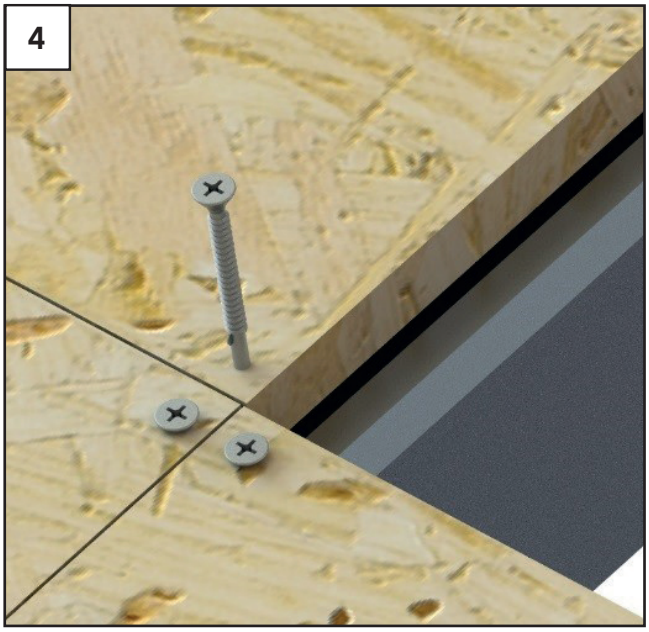

Secure base panels to rafters 10mm in from edge of base panels. Fix using 5.5 x 60mm self-drilling tek-screws provided.

Identify and locate top panels. Top panels in this area will be mitered to suit the pitch and should sit flush against house wall.

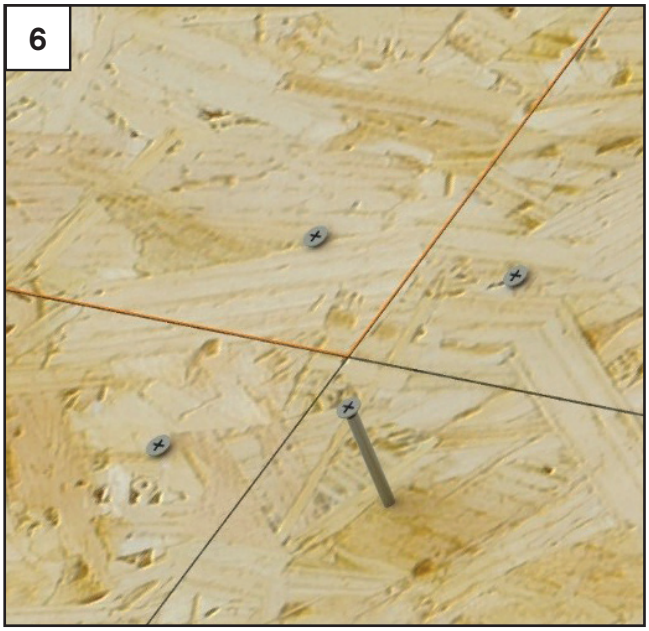

Fix top panels to base panels approx. 75mm in from the edge of the panel, using 4.0 x 90mm woodscrews provided.

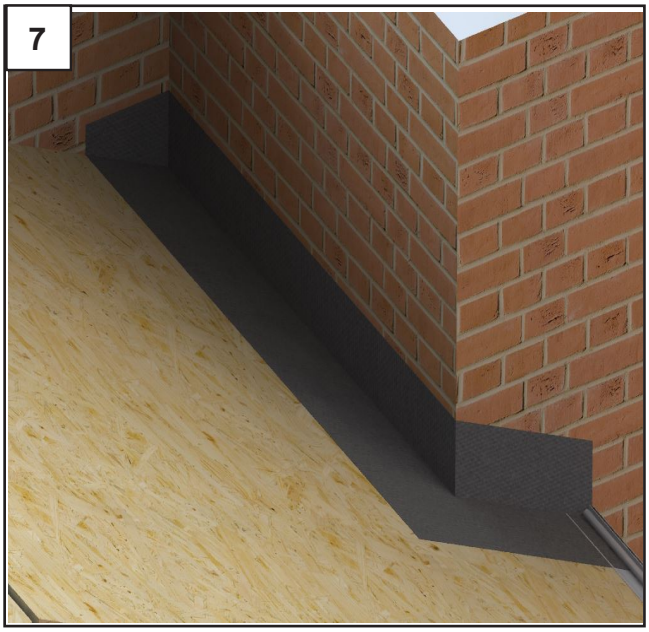

Flash roof and house wall with membrane where the flashing tray is to be installed. Take care where membrane runs up the wall into or around a corner. **Note: Ensure membrane always has a min. 150mm overlap**

Position flashing tray against host wall. It is recommended to seal the tray to the host wall using a suitable sealant (low modulus silicone or lead sealant). Dress lead work over the flashing upstand.

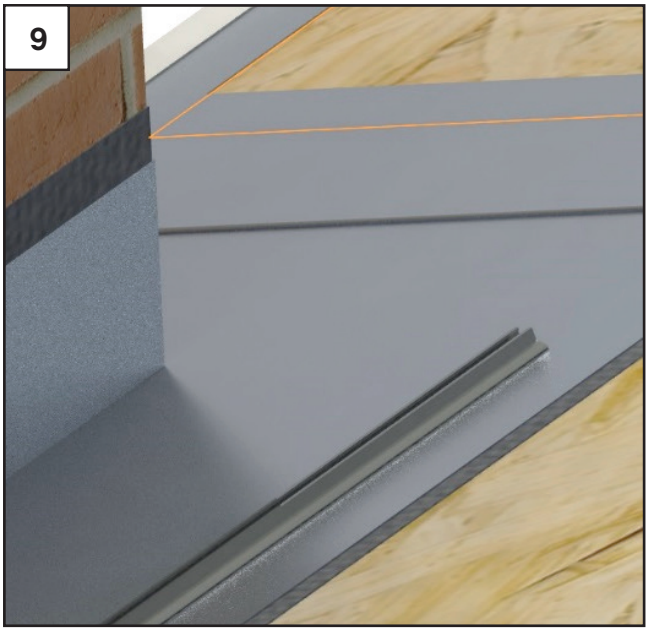

From information provided measure position of tile rail on flashing tray. It is recommended that generous bead of sealant is applied along the length of the tray beneath the tile rail prior fixing into position. **Note: Always ensure that full tiles are set along the tray (higher than the tray upstand where possible).**

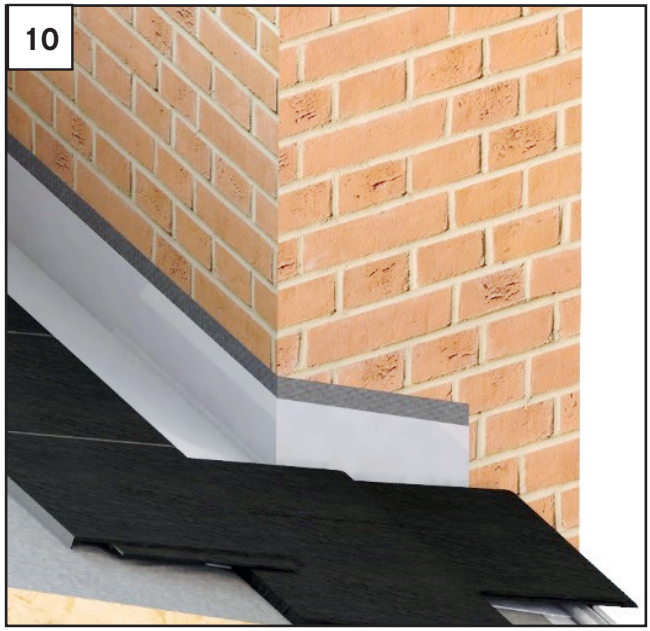

Continue to install breather membrane on the rest of the roof as previously described in the installation guide ensuring the breather membrane overlaps is adhered to.
Note: Always ensure that the membrane has a minimum 150mm overlap.

RETRO FIT POST INSTALLATION.

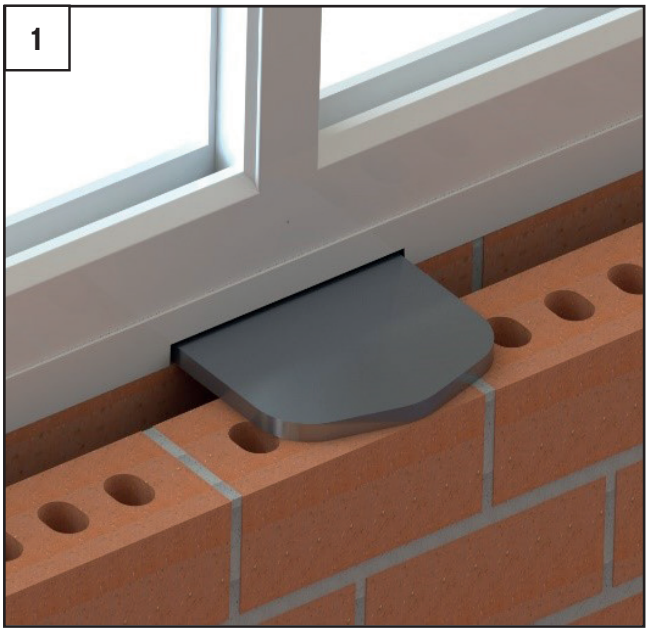

Prior to installation ensure base plate spans the cavity (supported by both the inner and outer skin of brickwork). Pack up or notch out the back of the window cill to enable base plate to sit on to outer skin of brick

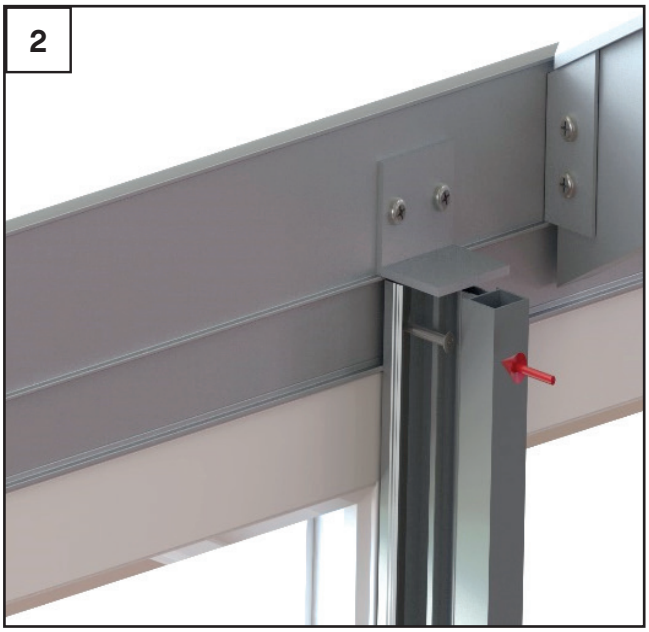

Identify mullion/post position, mark and fix 50x50mm angle bracket into eaves beam using 2 x M6 x 16mm Taptite Screws. (Ø5.5mm pilot hole required). Cut post to size to fit tight from underside of bracket to the baseplate.

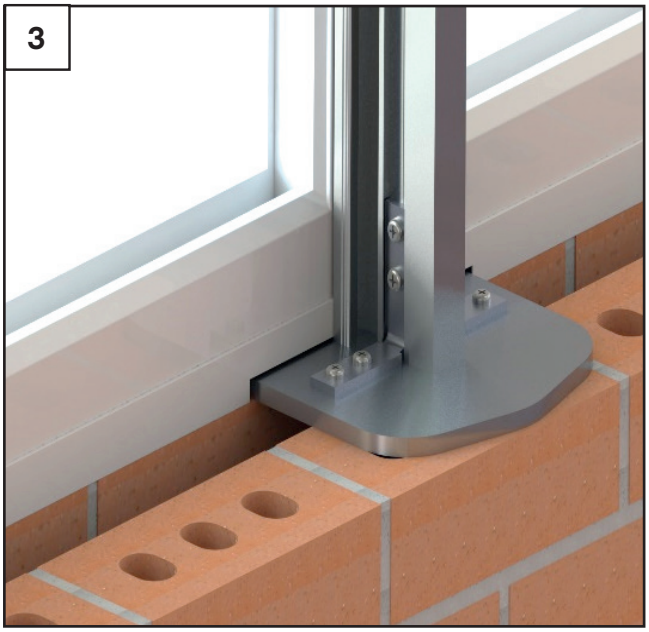

Slide 90° brackets into the end of the post and fix using M5x12 Taptite screws (Ø4.5mm pilot hole required). Position support post on base plate (see details on sheet 054) and fix to base plate using M5x12 Taptite screws.

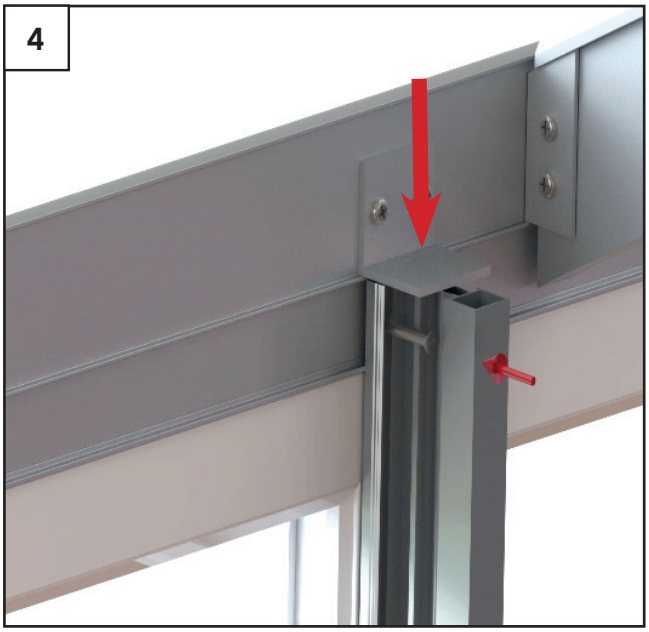

Ensuring post is plumb, fix either side of post into back of eaves beam using 2 x 4.8x32mm countersunk self-drilling screws. Fix post into frames no more than 200mm from top and bottom and at 500mm centers using the 32mm countersunk self-drilling screws.

When installing the window board, mark and notch around the post to suit. Some notching or packing to the underside of the window board may be necessary.

Before installing the base panels mark and notch out bottom edge of base panel approx. 70mm wide to clear top of retrofit post and eaves angle. Back fill any gaps in the insulation with expanding foam.

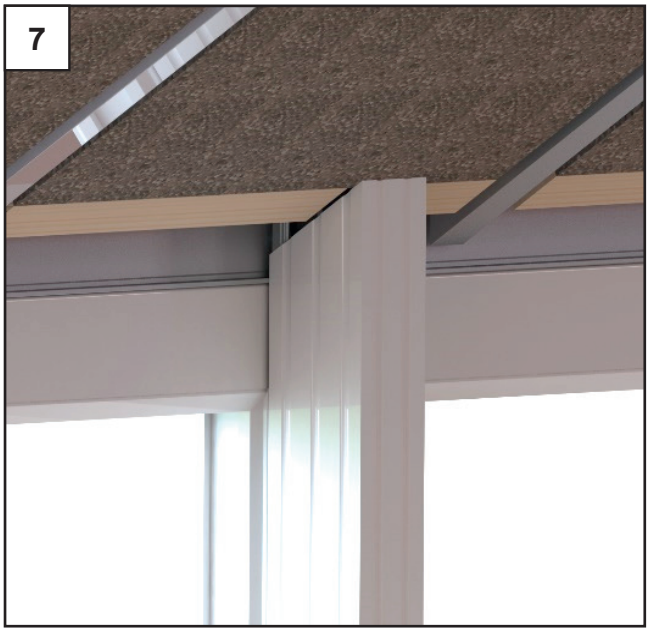

Measure and cut the PVC cladding to the underside of the pitched roof and knock onto post using a nylon mallet.

Cladding should sit flush against window board.

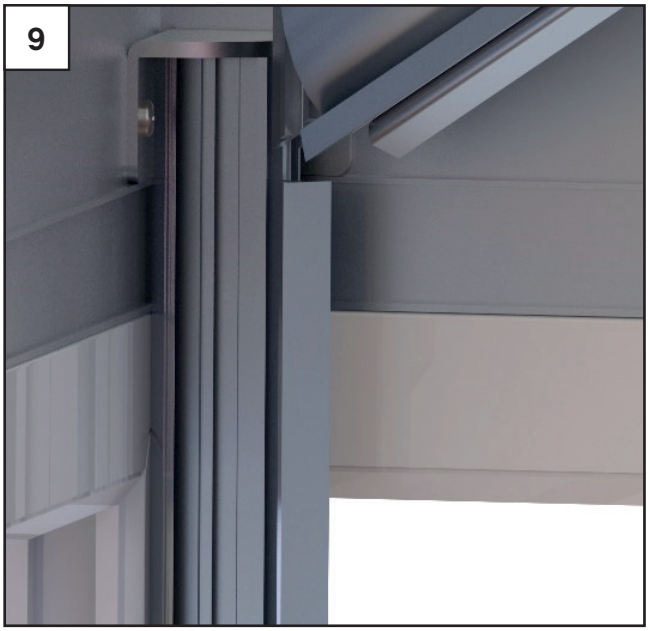

Inline Retro Fit Post

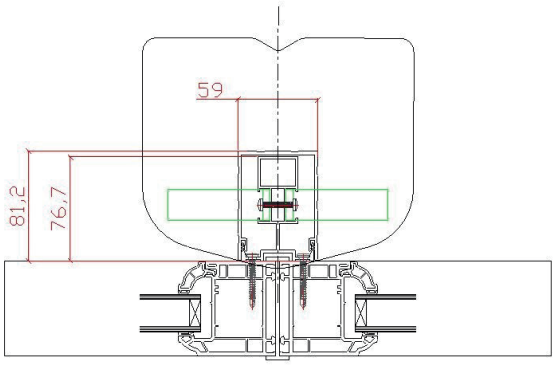

On a corner post. Remove the 2 inner M6 screws from the corner bracket. Line post up and cut to size to fit beneath the corner plate.

Mark and Notch the top internal edge of post to clear bottom edge of hip bar. Position post and fasten through post into the back of the eaves beam and frames using 2 x Ø4.8x70mm countersunk self-drilling screws.

90° Retro Fit Post
into 90° corner

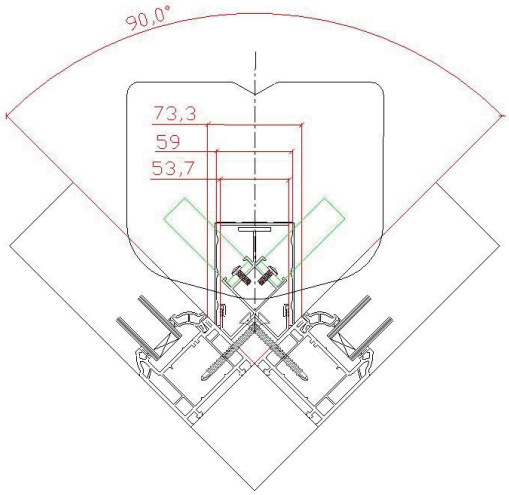

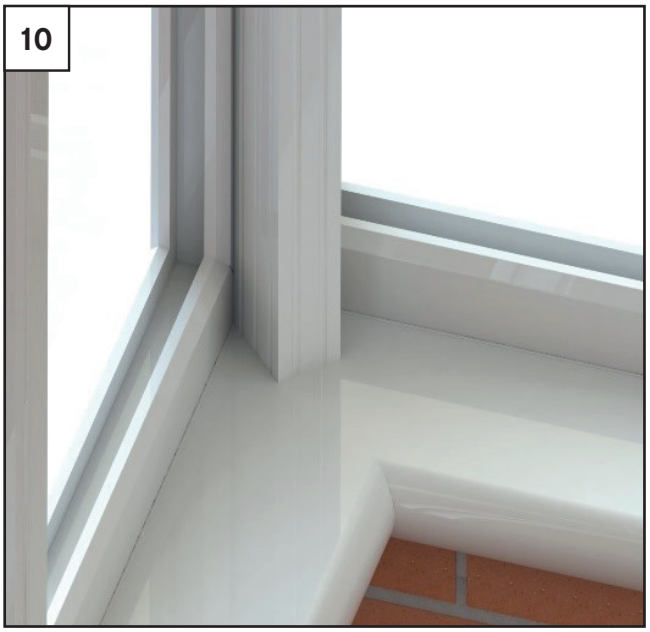

135° Retro Fit Post
into 135° corner

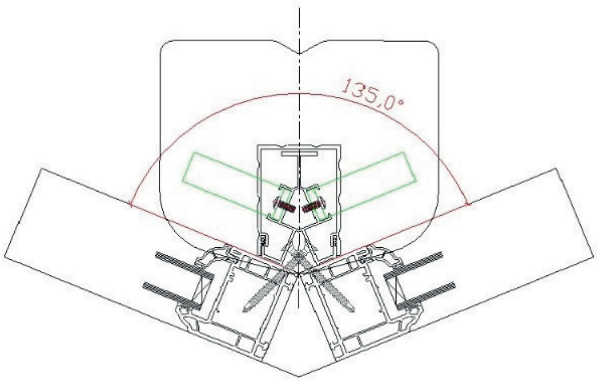

Follow Steps 5 and 8 notching, window board and cutting cladding in at the top and knocking into place, making sure cladding sits flush against window board.

HYBRID ROOF INSTALLATION - TIMBER RIDGE.

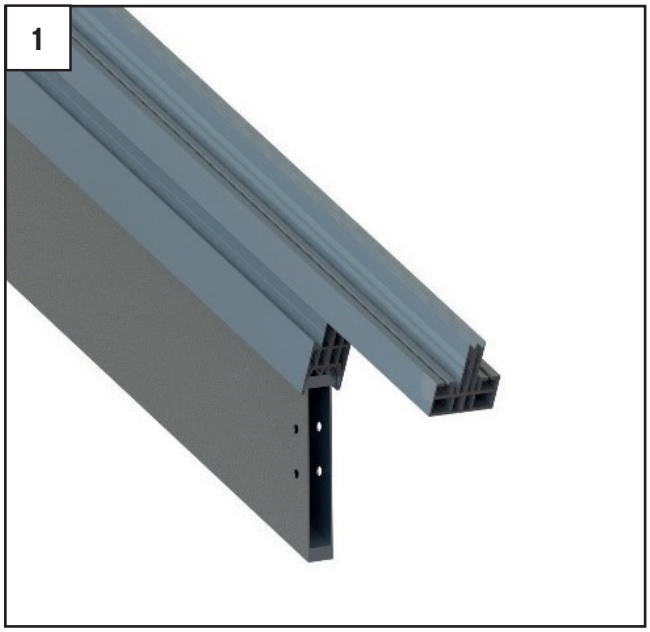

Prior installation, ensure the PVC thermal breaks have been connected to the applicable rafter, with the notched end at the bottom. On A-Frames against the host wall, back to back thermal breaks are used as shown above

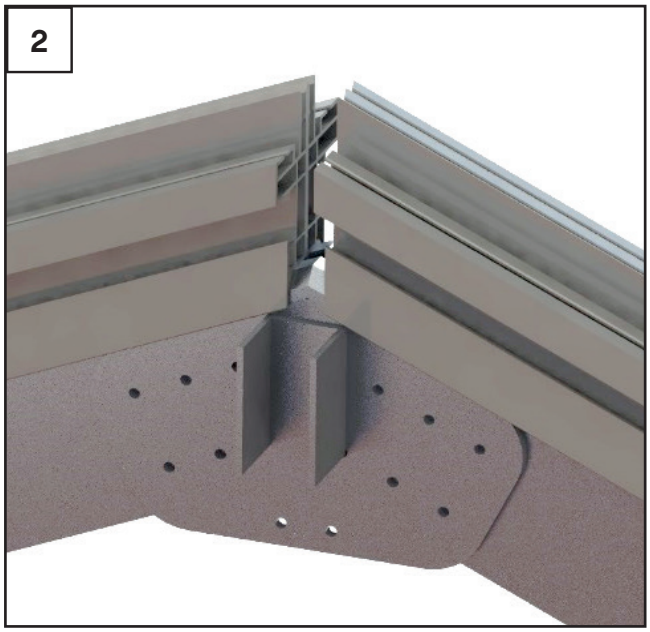

Leave an 18mm gap between each thermal break at the apex of the A-Frames (9mm each side) to allow for the OSB ridge support to run through.

Drop the assembled A-Frame inside the uchannel brackets at the pre-set positions on the eaves. At house wall, pack out between bar and wall and fasten A-frame to house wall at approx. 500mm centres using substantial substrate fixings **(Not supplied by Prefix).**

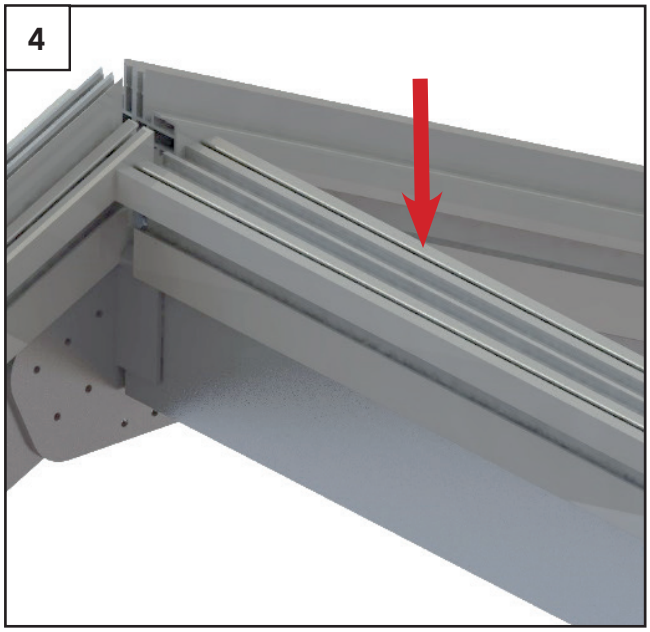

When locating A-Frames, drop ridge rafter into the u-channels on the A-Frame gusset plates until shoulder of rafter sits on to top of bracket. This may require positioning before fully locating A-Frames into Eaves Brackets. PVC on ridge should sit up to PVC on rafters. Fix using 2 x M6 x 16mm Taptite screws each side.

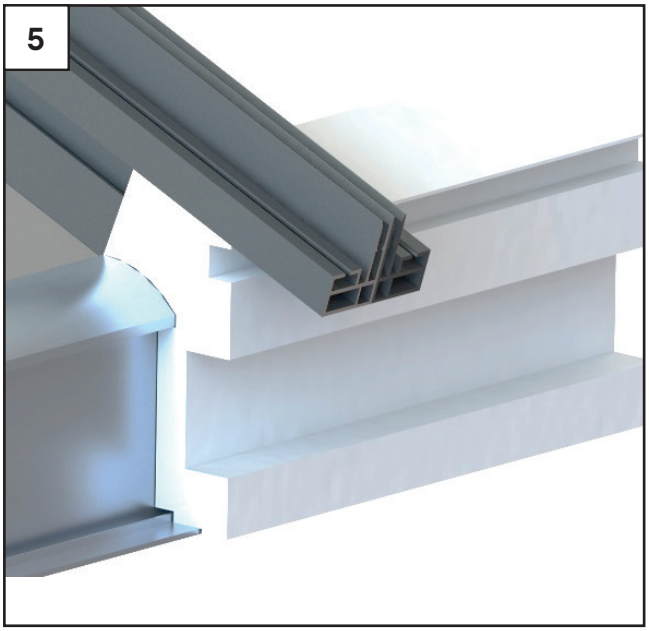

Thermal Break will be notched over the eaves to run past fascia board and support the glass. The eaves insulation and fascia board will be notched to suit.

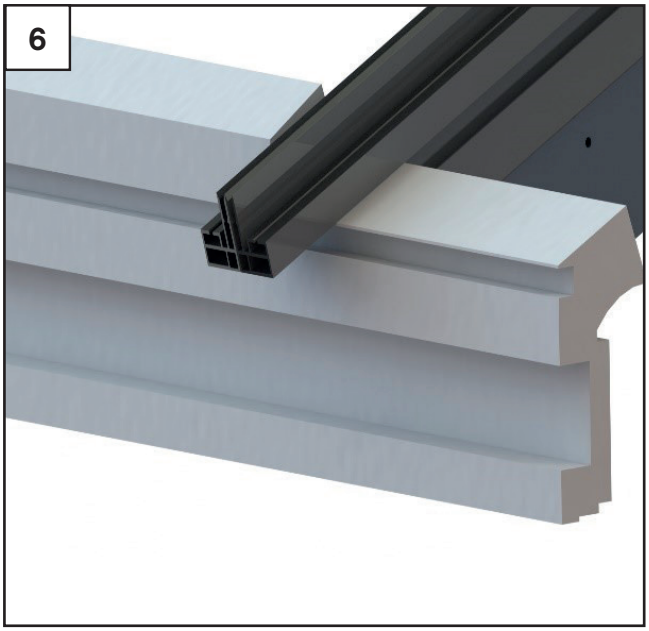

Locate pre-notched eaves insulation between the rafters, this may need splitting centrally to fit in around thermal break. Top of insulation should sit flush with gasket channel in the PVC extrusion.

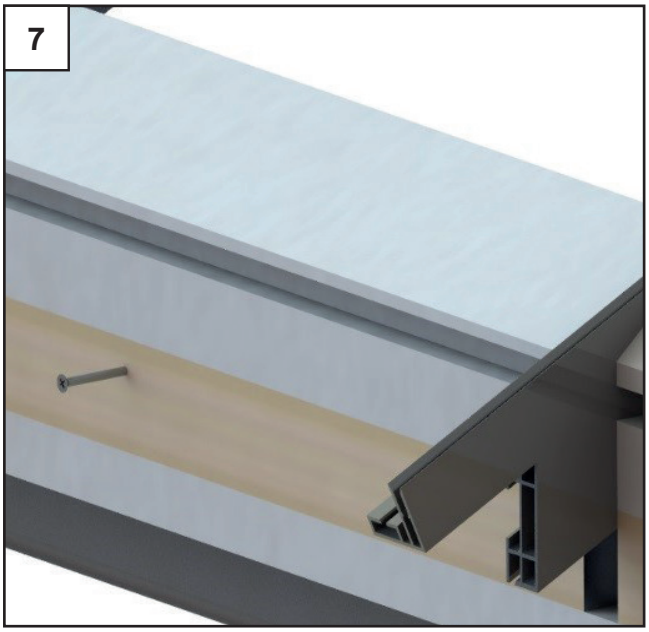

Insert 25x50mm timber batten into recess in the front of the eaves insulation. This may need cutting between the PVC rafters. Fix through timber into the aluminium eaves beam using the bay pole screws provided to secure the insulation in place.
86mm insulation = 60mm bay pole screws.
116mm insulation = 100mm bay pole screws.

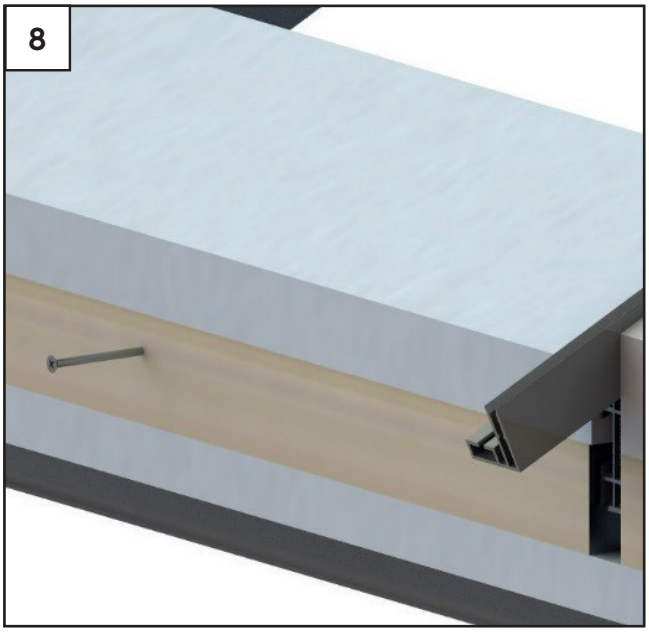

If an overhang is required, repeat steps 6 & 7 locating the insulation and batten in position. Fix through battens using 90mm woodscrews provided.

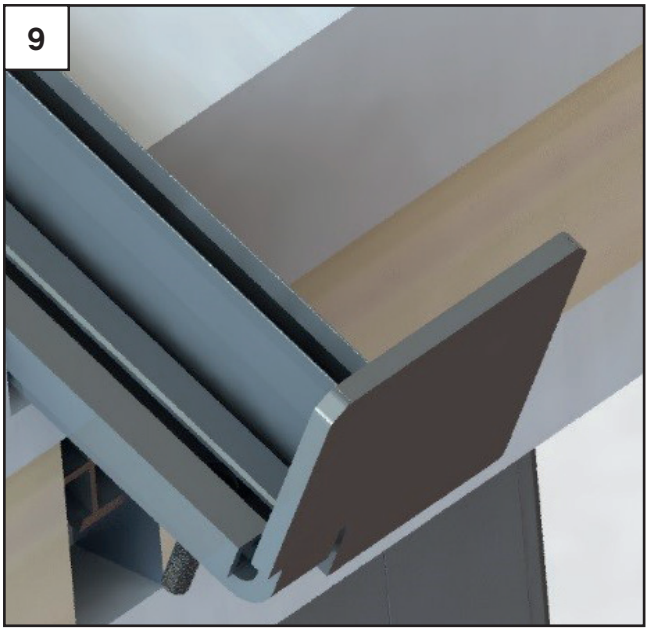

Take glazing bar end caps/glass stops and slide inside chamber below gasket chamber or position on underside if notched away. Fix through using 2 x M6x25mm square head nuts and secure with m6 bolts supplied. Note: these caps are handed.

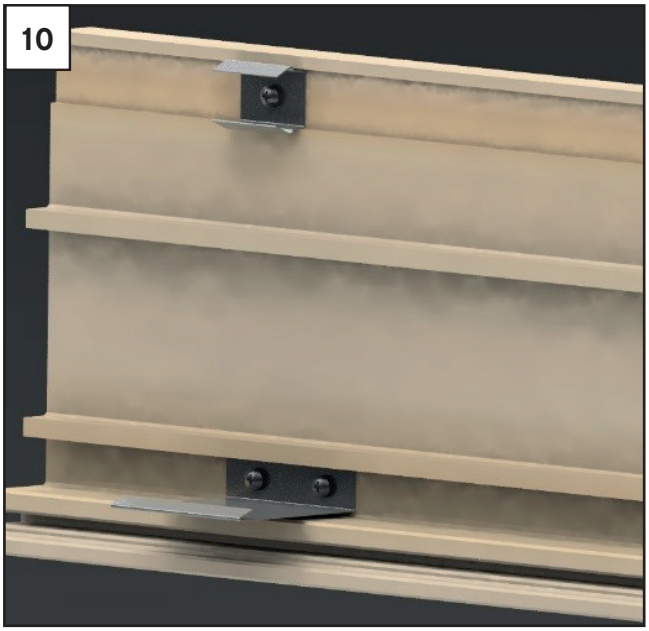

Locate all Opus Claddings and ensure clips are fitted to the back and not damaged. Top clip engages into PVC Rails on rafters. Bottom clip clips around the underside of the rafter.

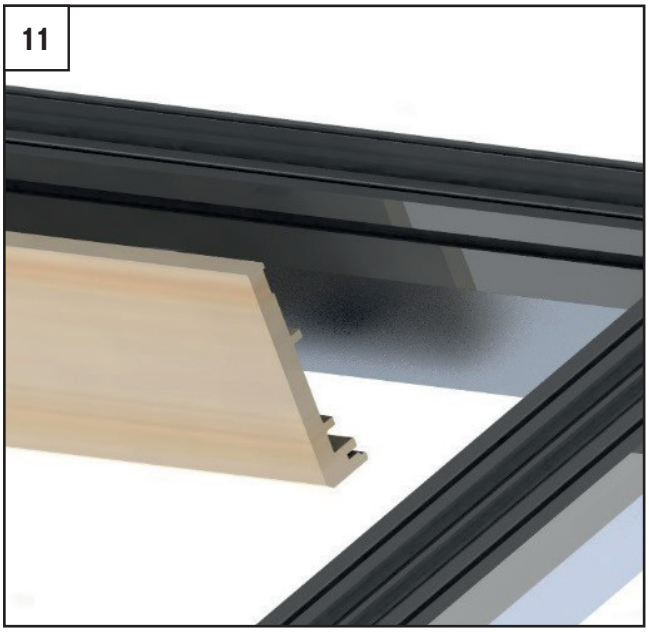

Clip Opus cladding into PVC thermal break (timber should sit flush with internal edge of PVC). Ensure bottom clip engages around underside of aluminium rafter.

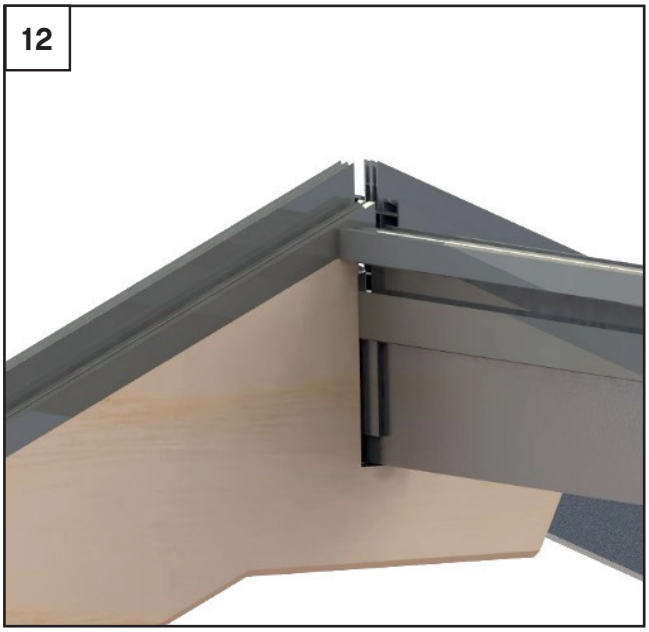

Push Key Stone Timber at Apex up from under the ridge rafter. May need packing off aluminium. Rafter claddings will have a biscuit joint which will join to the ridge key stone. Apply glue and push tight the joints at the ridge on both sides ensuring a tight and neat finish.

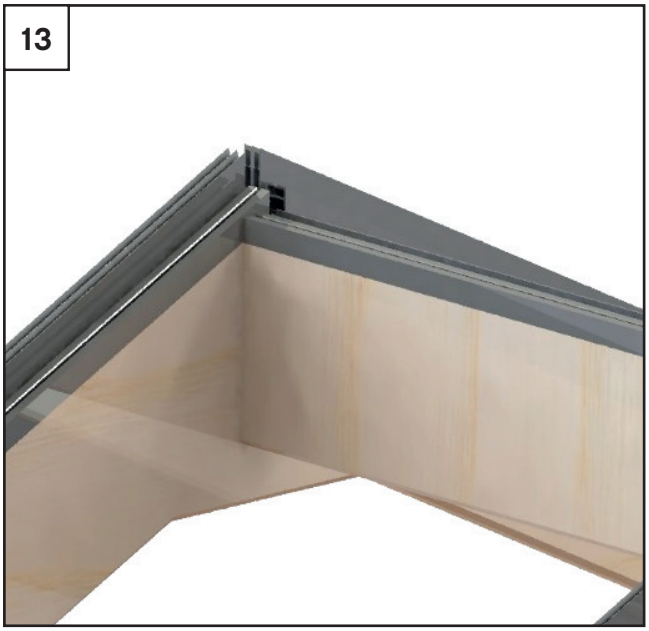

Clip Timber Claddings into position around the ridge beam. Glue timber joint strips in the bottom of the claddings and clamp until glue dries.

Position Eaves cross rafter assembly in position at the bottom of the glass opening.
Timber claddings mitre together to create a timber box frame on the inside of the roof.

Push eaves rafter assembly tight up to the mitres on the A-Frame claddings ensuring no gaps in the mitres. Where small gaps or hairlines are visible, fill with flexible sealant supplied in the ancillary box.

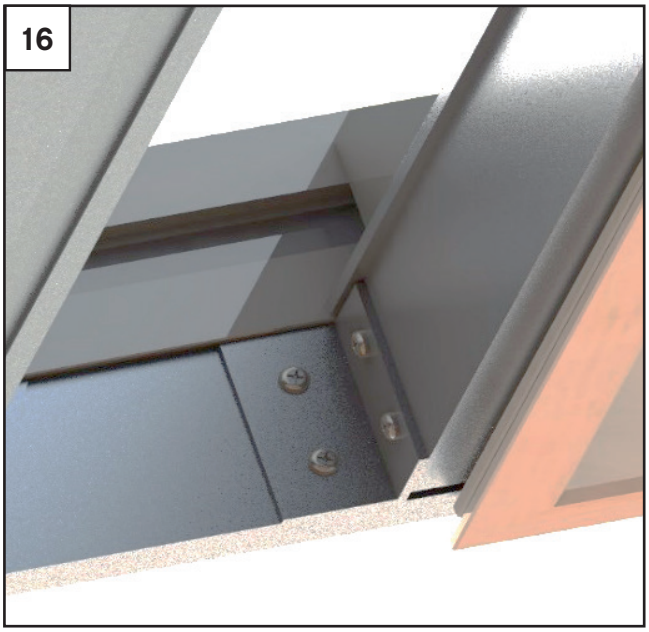

L Shaped bracket will be fixed to the back of the cross rafter. Once pushed tight in position fix through bracket in to A-Frame rafters using 2 x M6x16mm Taptite screws supplied.

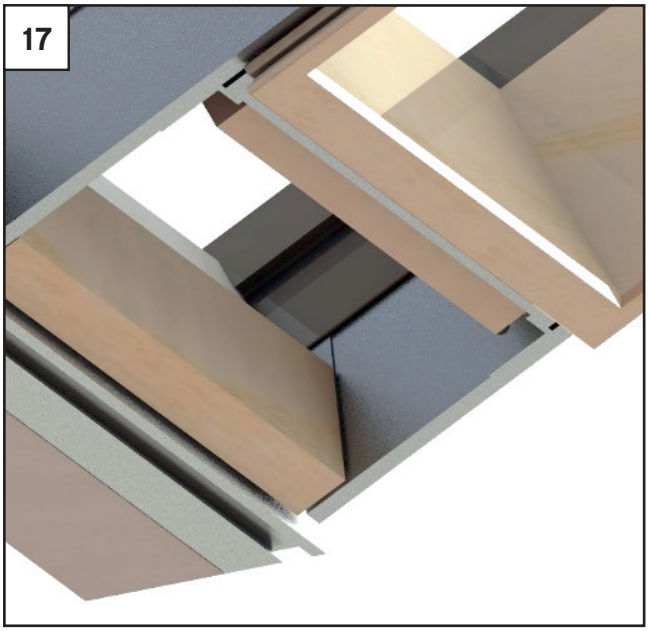

Fasten ripped down 100x38mm timber to back of eaves beam. Chamfer to run in line with underside of rafter to use as a fixing point for plasterboard. Fix 25x50mm timber to back of cross rafter to act as plasterboard fixing behind the opus cladding.
Skip this step if fitting pelmet.

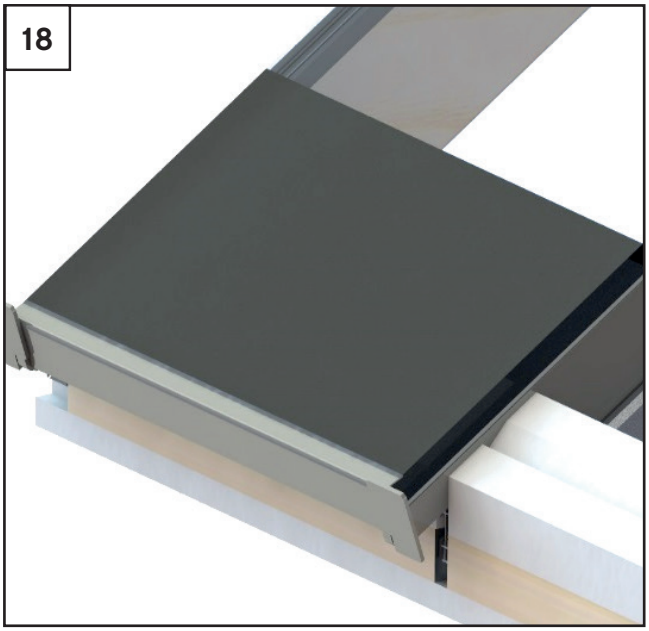

Ensure E gasket is fitted down the PVC channel and insert glass units. Ensure Glazing bar end caps are bolted in position at bottom of thermal break, before fitting glass as these act as glass stops. Black out film to sit on internal face of glass at the eaves to mask the internal structure of the roof through the glass.

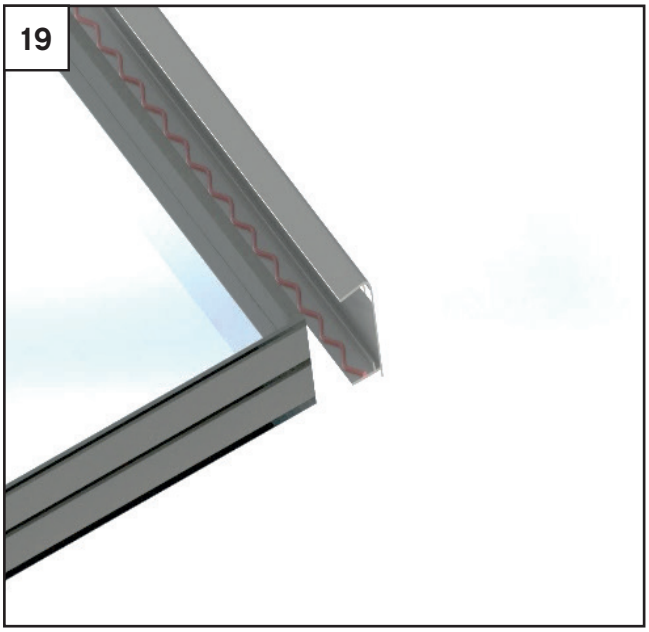

Take 44mm PVC end channel and run a bead of suitable MS polymer sealant along the top and bottom internal faces and slide over the top and bottom edges of the glass units. **Note: at the bottom of the unit the tab on the PVC should face down. On the top of the unit the tab should face upwards.**

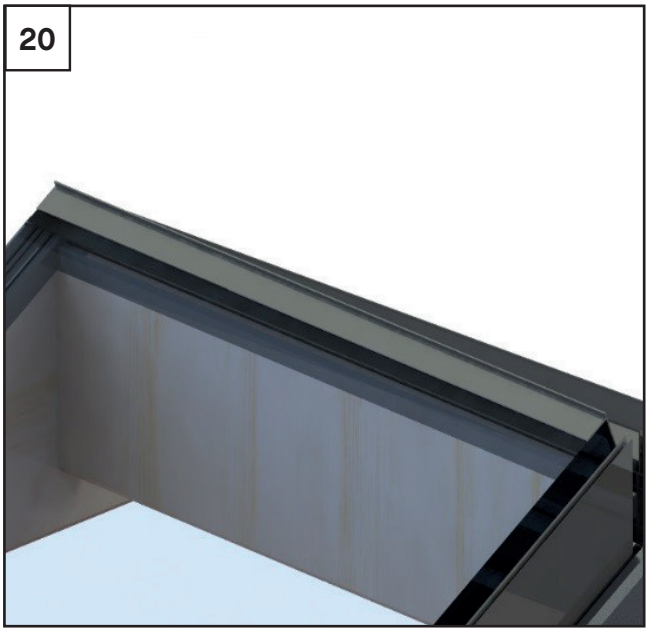

Once glass is located. Insert base panels, top panels, OSB spines, fascia and gutter, as per earlier on in installation guide.

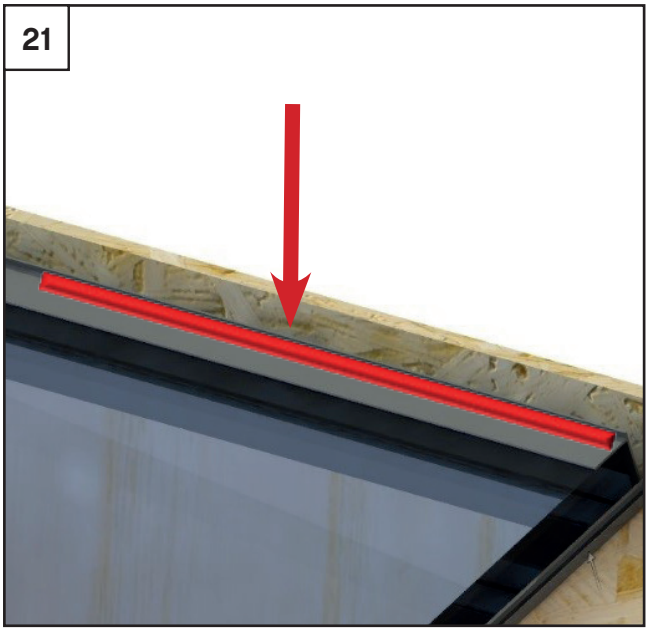

Run expanding foam along edge between OSB ridge and the 44mm glazing end channel to fill and seal this area.

Run flash band seal over the whole ridge and onto the glazing end channel, ensure watertight.

Lay membrane across rest of WARMroof, leaving extra at glass to lap up behind soaker rail. Take soaker rail with the ripped down upstand (approx. 25-30mm) and position tight up to edge of panels/ back of PVC thermal break.
(Note: glazing bar end cap omitted from this view for clarity)

Tile rest of roof. Leave approx. 20mm gap between end of tiles and soaker rail upstand to allow glazing bar top cap fit.
Push glazing bar top cap down securely into PVC Thermal break, ensuring even seal on the gasket onto the glass.
Expanding foam seal should expand to fill voids against the tiles.

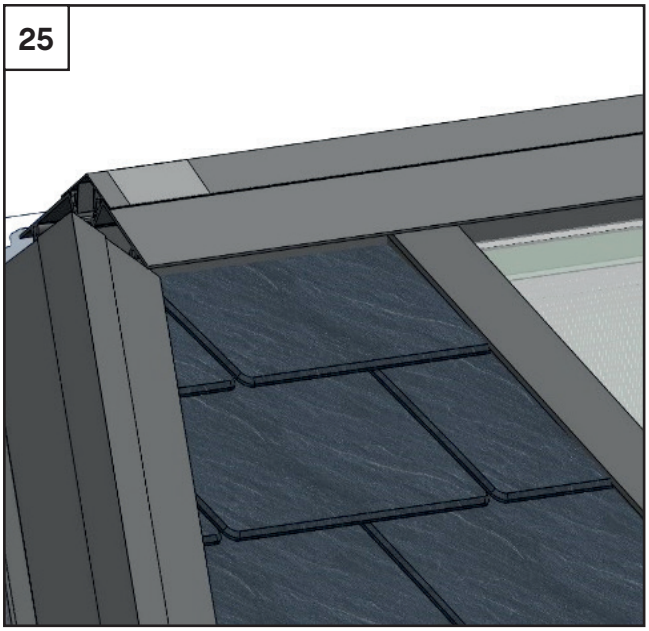

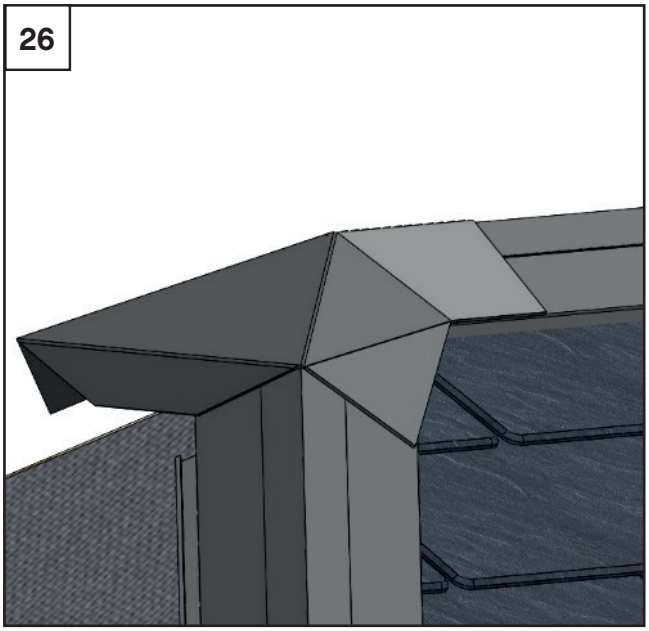

Fit top cap as per WARMroof install guide drill through aluminium at approx. 500mm centers fixing down into OSB ridge spine using 40mm stainless steel screws supplied. **Note: ensure top layer of tiles is packed up appropriately for capping gasket to seal against the tile. This may require cutting an additional row of tiles in to make work. Or packing below tiles with OSB.**

Prior to fitting the top cap cover, Notch back the top cover rail accordingly to allow radius end cover cap to clip into the top cap base. Using colour coded sealant, seal underside of radius end cover and clip into Ridge Top Cap Base. Ensure good amount of sealant to ensure radius end cover seals against ridge and hips and glass.

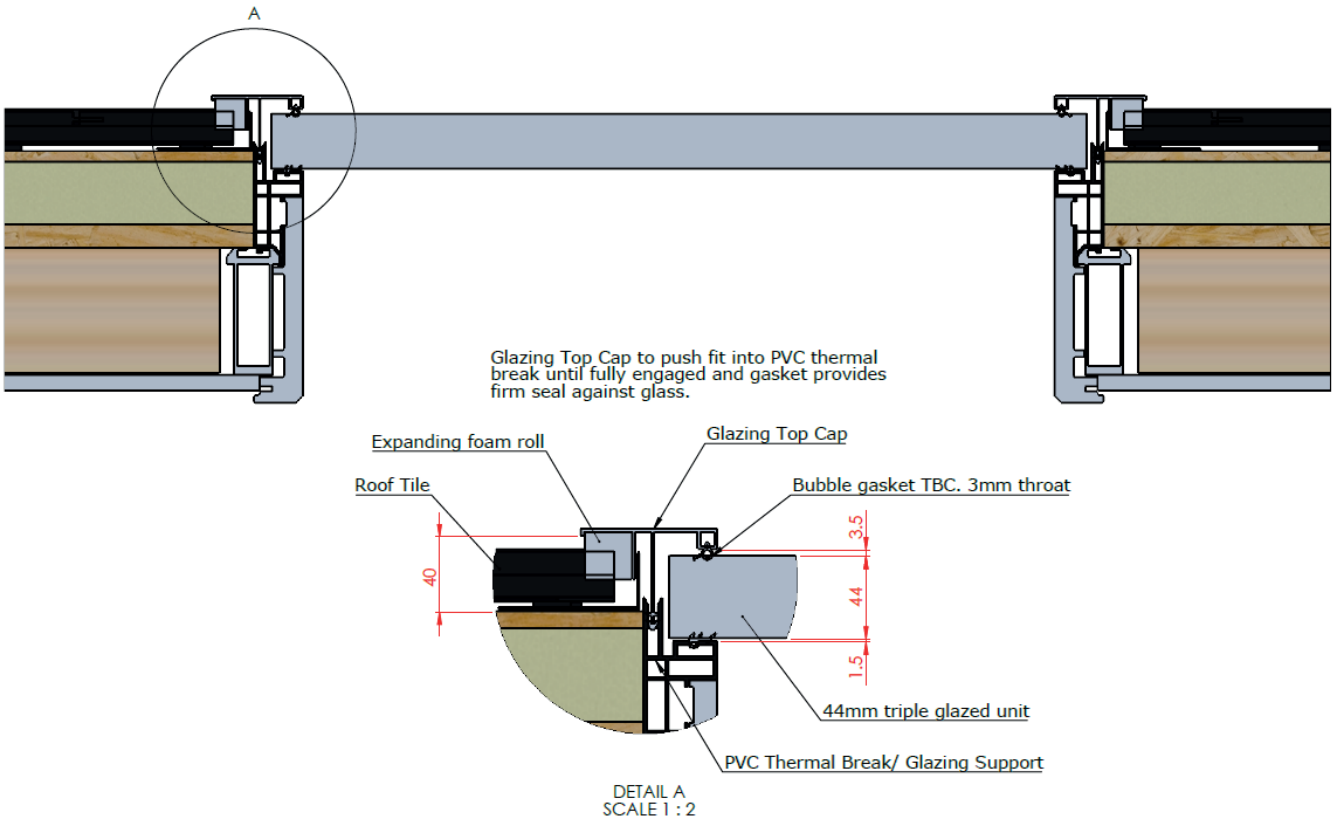

HYBRID ROOF INSTALLATION - DROP RIDGE.

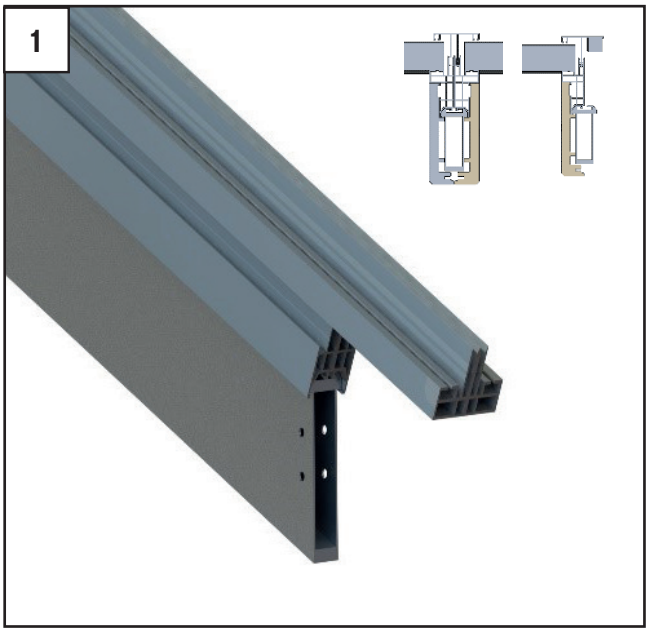

Note: The Opus A-Frames may have already been pre-assembled in manufacture.
Slide the PVC thermal Break up the applicable rafter, with the notched end at the bottom. On A-Frames against the host wall, back to back thermal breaks are used as shown above.

Drop the assembled A-Frame into the prepositioned brackets on the eaves. Always pack starter A-Frame off wall and fasten to host wall 250mm from ends and at max. 500mm centres using substantial substrate fixings **(Not supplied by Prefix).**

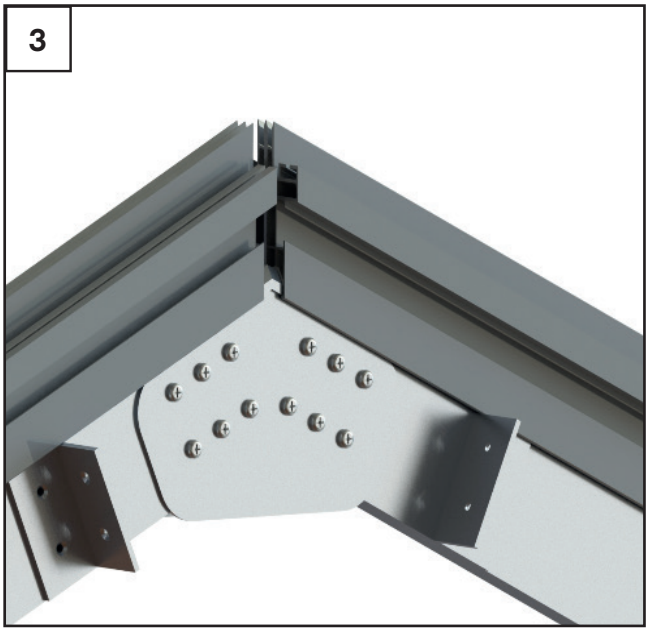

Ensure Brackets located on rafter are pointing inwards on the sections where the glass units will be placed. There should be one at the ridge and one at the eaves to position the cross rafters.

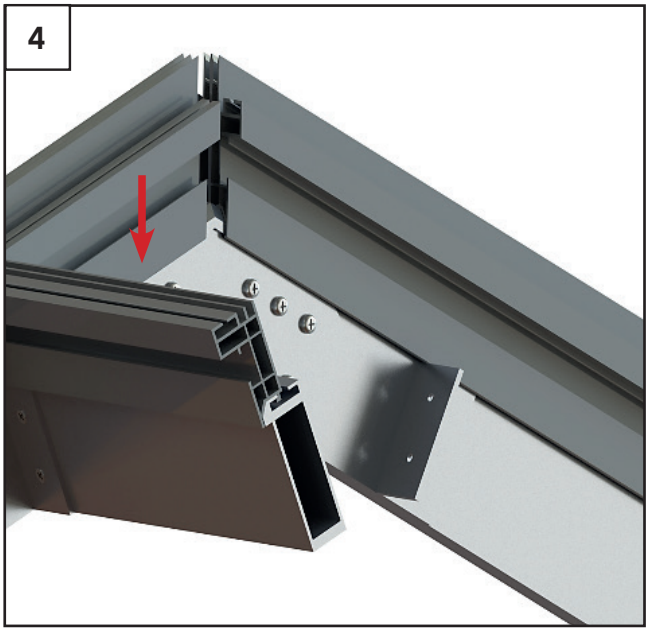

Once A-Frames are installed, select the appropriate cross rafters (using paperwork supplied) and drop into positions at ridge and eaves. Fix using 2 x 4.8 x 32mm countersunk self-drilling screws provided per bracket.

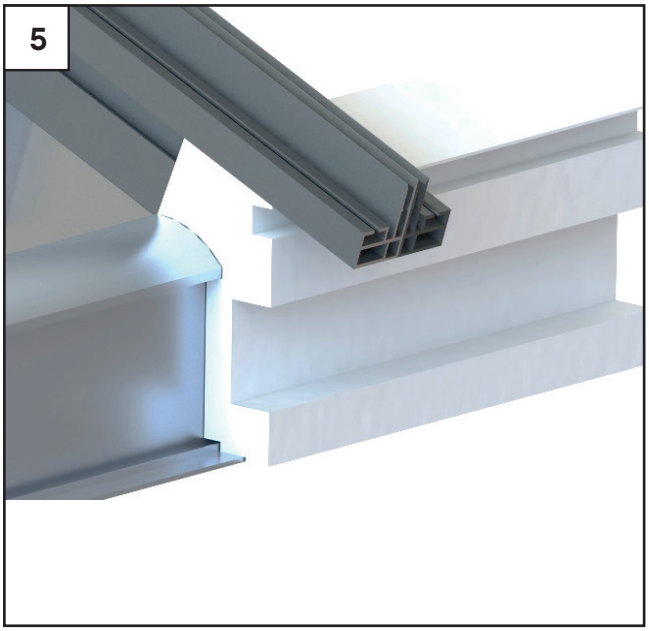

Thermal Break will be notched over the eaves to run past fascia board and support the glass. The eaves insulation and fascia board will be notched to suit.

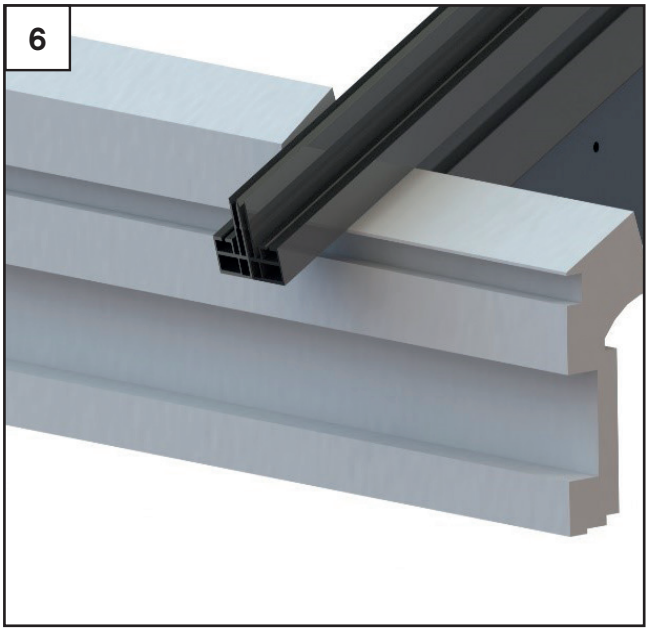

Locate pre notched eaves insulation between the rafters, this may need splitting centrally to fit in around thermal break. Top of insulation should sit flush with gasket channel in the PVC extrusion.

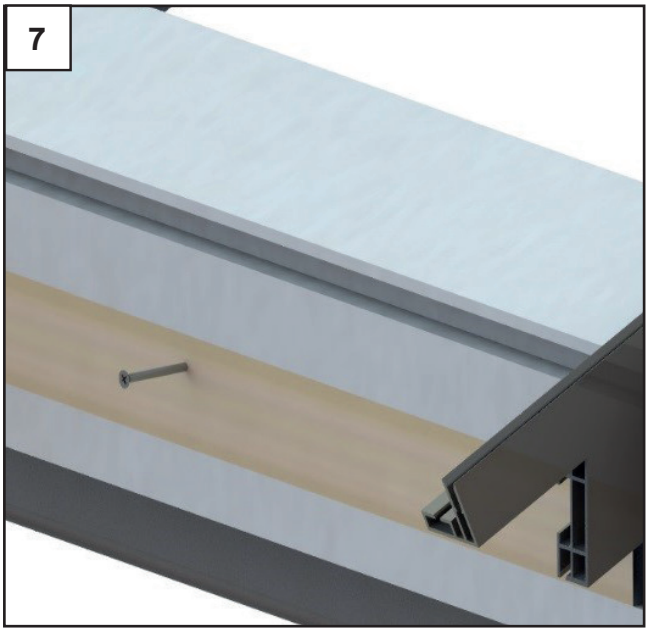

Insert 25x50mm timber batten into recess in the front of the eaves insulation. This may need cutting between the PVC rafters. Fix through timber into the aluminium eaves beam using the bay pole screws provided to secure the insulation in place.
86mm insulation = 60mm bay pole screws.
116mm insulation = 100mm bay pole screws.

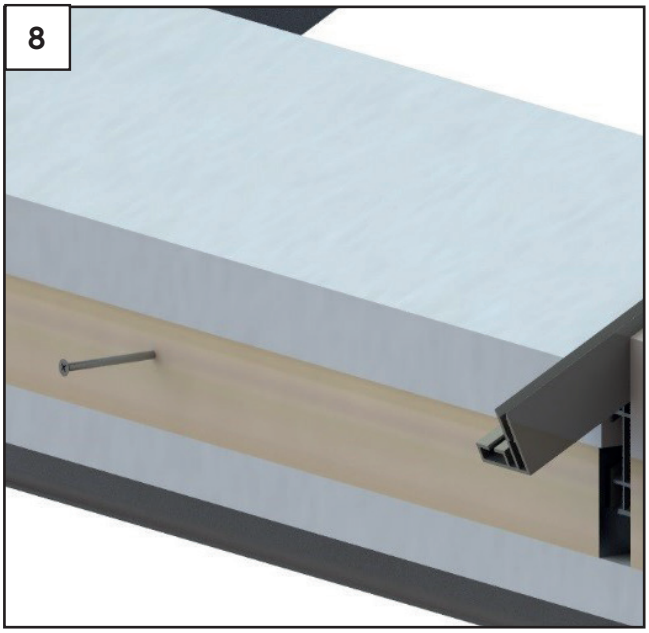

If an overhang is required, repeat steps 6 & 7 locating the insulation and batten in position. Fix through battens using 90mm woodscrews provided.

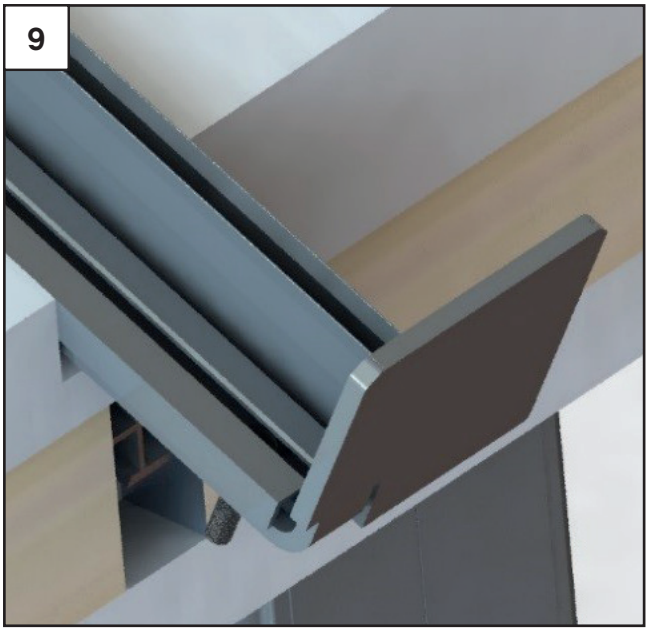

Take glazing bar end caps/glass stops and slide inside chamber below gasket chamber or position on underside of PVC if the lower channel is notched away. Fix through using 2 x M6x25mm square head nuts and secure with M6 bolts supplied. Note: these caps are handed.

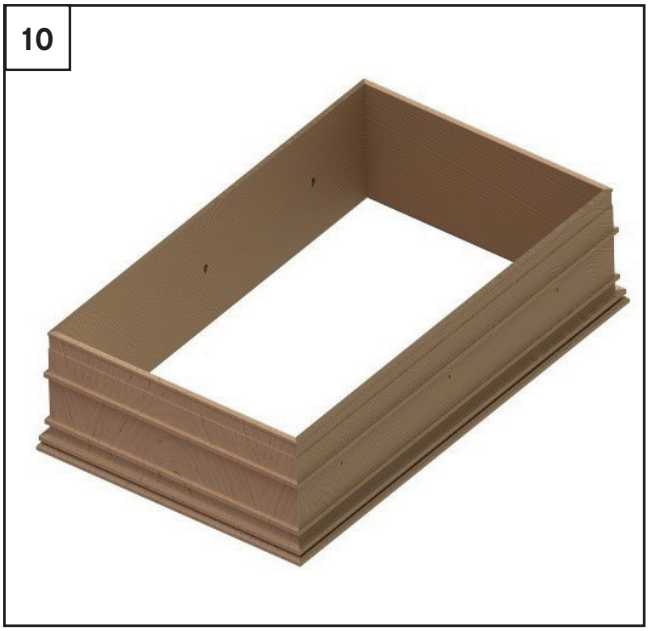

Locate all Opus timber boxes and ensure they are rigid and not damaged.

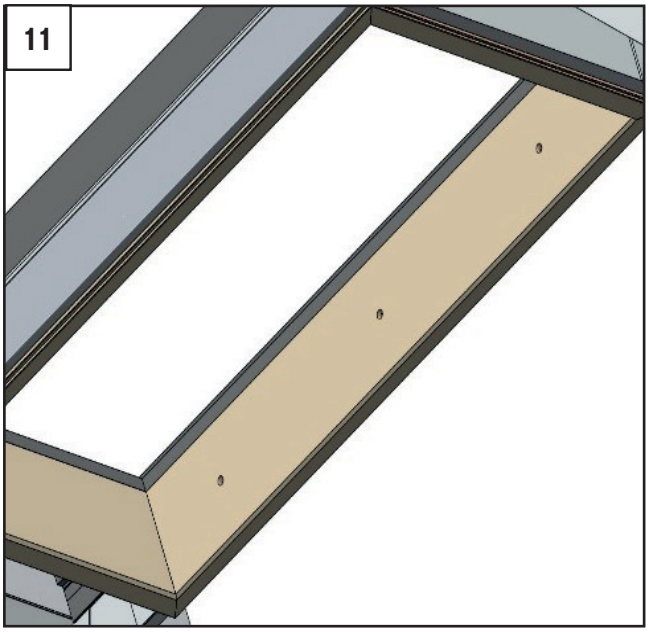

Position Opus cladding into glazing rebate in the framework. Push up till the timber sits flush to the thermal break (timber should sit flush with internal edge of PVC).

Prefix recommend fitting timber once the roof is weather tight.

For rest of Hybrid Installation follow steps 17-26 on pages 42-43 “Hybrid Installation”.

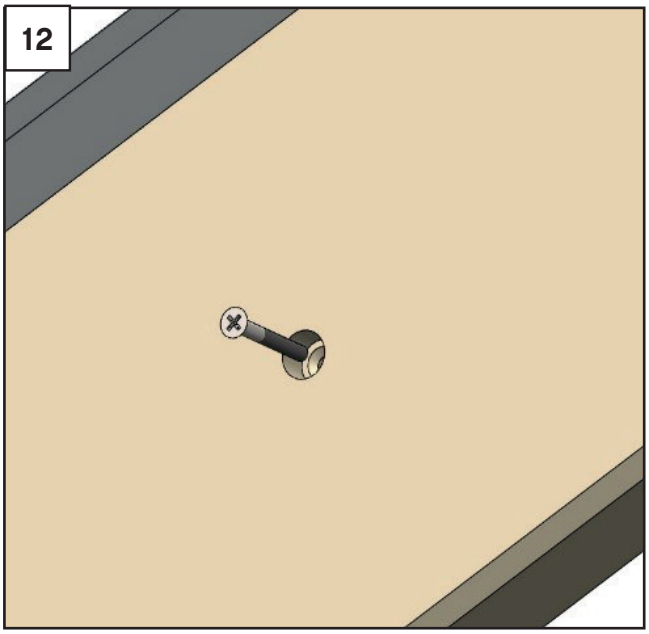

Holding the box in position, secure through pre-drilled holes in to aluminium rafter using the Ø4.8 x 32mm countersunk self-drilling screws provided into the pre-drilled hole positions in the timber. Using the plugs provided, tap in until flush with external face of timber cladding. Range of plugs supplied, line up grains where possible to minimise visibility of the plugs. However due to the use of natural materials they will remain visible, yet subtle.

Please note, if there is anything that you feel is not covered in this installation guide to assist you with your WARMroof installation, please contact our technical team on 01254 871800.

If you are unsure about any part of the installation, our team are here to help.

PREFIX (UK) Ltd
Systems House | Cunliffe Road | Blackburn
Lancashire | BB1 5UA
T: 01254 871800

PREFIX (SOUTH) Ltd
Unit 16 Barn Way | Lodge Farm Ind. Estate
East Dunston | Northampton | NN5 7UW
T: 01604 750212

PREFIX (SOUTH WEST) Ltd
Unit 7 Ystrad Trade Park | Ystrad Road
Fforestfach | Swansea | SA5 4JB
T: 01792 588254

PAVILION SYSTEMS Ltd
Unit F2 Ford Airfield Ind. Estate
Ford | Arundel | West Sussex | BN18 0HY
T: 01903 739440

W: www.prefixsystems.co.uk
E: warmroof@prefixsystems.co.uk

@prefixsystems

Prefix Systems

@prefixsystems

AUGUST 2018